LEBANON PLANNING BOARD
OCTOBER 9, 2023 - 6:30 PM
COUNCIL CHAMBERS, CITY HALL OR REMOTE VIA VIRTUAL PLATFORM
LEBANONNH.GOV/LIVE

---

1. Call to Order

2. Notice of Regional Impact

3. Public Hearing Items

A. **Vincent & Tarah Cantore, 121 Slayton Hill Road (Tax Map 134, Lot 10), zoned RL-2**: Request for approval of a proposed three (3)-lot Minor Subdivision. **PB2023-13-MIN**

B. **Johanna Cicotte & Edwards Properties, LLC, 30 Little Heater Road (Tax Map 78, Lot 61) and 1 Edwards Street (Tax Map 78, Lot 56), zoned IND-L:** Request for a Boundary Line Adjustment. **PB2022-42-BLA**

C. **SPNH Lebanon North, LLC, 402 & 392 Mount Support Road (Tax Map 24, Lots 9 & 10), zoned R-1:** Pursuant to Section 9.1 of the Site Plan Review Regulations, a request for a modification to a previously approved Site Plan (PB2021-33-SPR) for a 204-unit multi-family development. Applicant proposes to construct 3, 4-story multi-family dwellings and a community amenity building in place of the 4, 3-story multi-family dwellings currently approved, together with related modifications to parking, utilities, landscaping, access, and other site improvements. **PB2023-34-SPR**

4. Deliberation

A. **XYZ Dairy, LLC, River Park Drive (Tax Map 44, Lots 3 & 7, and Tax Map 44, Lots 21-30), zoned CBD, IND-L and R-3**: Request to amend the conditions of approval for the River Park development, approved by the Planning Board pursuant to Notices of Action dated September 9, 2019 for PB2018-34-and October 12, 2012 for PB2021-29-EXT. **PB2023-22-SPA - Continued from September 11, 2023**

5. Other Business

6. Approval of Minutes

A. September 11, 2023

7. Adjournment

The order of agenda items is subject to change.

Meetings are open for in-person and remote attendance. Members of the public that wish to attend remotely may do so by going to LebanonNH.gov/Live where you will find instructions on how to enter the meeting. Members of the public will be able to participate and ask questions through the City's virtual platform or by phone. Please note: Should technical difficulties occur during the meeting that disrupts virtual or phone connection(s), the meeting will

continue without remote access capabilities.

CITY OF LEBANON ~ PLANNING & DEVELOPMENT

PLANNING BOARD

October 9, 2023 Meeting

Staff Memorandum – PB2023-13-MIN

APPLICATION INFORMATION

Agenda Item: 3.A

Application ID:
PB2023-13-MIN

Application Type:
Minor Subdivision

Property Location & Tax Map:
121 Slayton Hill Road (Tax Map 134, Lot 10)

Property Owner/Applicant:
Vincent & Tarah Cantore

Zoning District:
Rural Lands Two (RL-2)

Property Size (existing):
+/-35.57 acres *(per City Assessing records)*

Overlay District(s):
- Wetlands Conservation District

LEGAL NOTICE

Vincent & Tarah Cantore, 121 Slayton Hill Road (Tax Map 134, Lot 10), zoned RL-2: Request for approval of a proposed three (3)-lot Minor Subdivision. PB2023-13-MIN

PLANS AND APPLICATION MATERIALS

- Application form (1 page)
- Subdivision Regulations - Technical Checklist (3 pages)
- Plat titled, "Subdivision Plan," prepared by Paton Land Surveying, dated August 23, 2023.
- Applicant's response to staff comments (6 pages including a hand-marked copy of the Subdivision Plan)

COMPLETENESS REVIEW

This application has been reviewed in accordance with the Lebanon Subdivision Regulations. At the time of the writing of this memo, the applicant has not demonstrated compliance with the soils data, testing and reporting requirements of Section 13.4.A (required for lots to be served by on-site subsurface sewage disposal systems). Provided that the applicant either provides the required information or submits a written waiver request prior to the public hearing, the Planning and Development Department will recommend that the Board find that the application is complete enough to accept jurisdiction and to commence review.

APPLICATION OVERVIEW

The subject property is a +/-35.57 acre parcel owned by the applicant and located in the Rural Lands Two (RL-2) District at the northeast corner of Slayton Hill Road and Old Kings Highway (see Figure 1 below). The property is currently improved with a one-family dwelling and is otherwise wooded. The applicant proposes to subdivide the property into three (3) lots as follows:

- Lot 1: +/-12.0 acres (improved with the existing dwelling);
- Lot 2: +/-12.00 acres; and
- Lot 3: +/-11.74

New lots 2 and 3 will have frontage on Slayton Hill Road and will be served by on-site septic systems and wells, the design of which require approval from the NH Dep't of Environmental Services. Proposed driveway locations to Lots 2 and 3 are not depicted.

Figure 1. Aerial view of subject property.

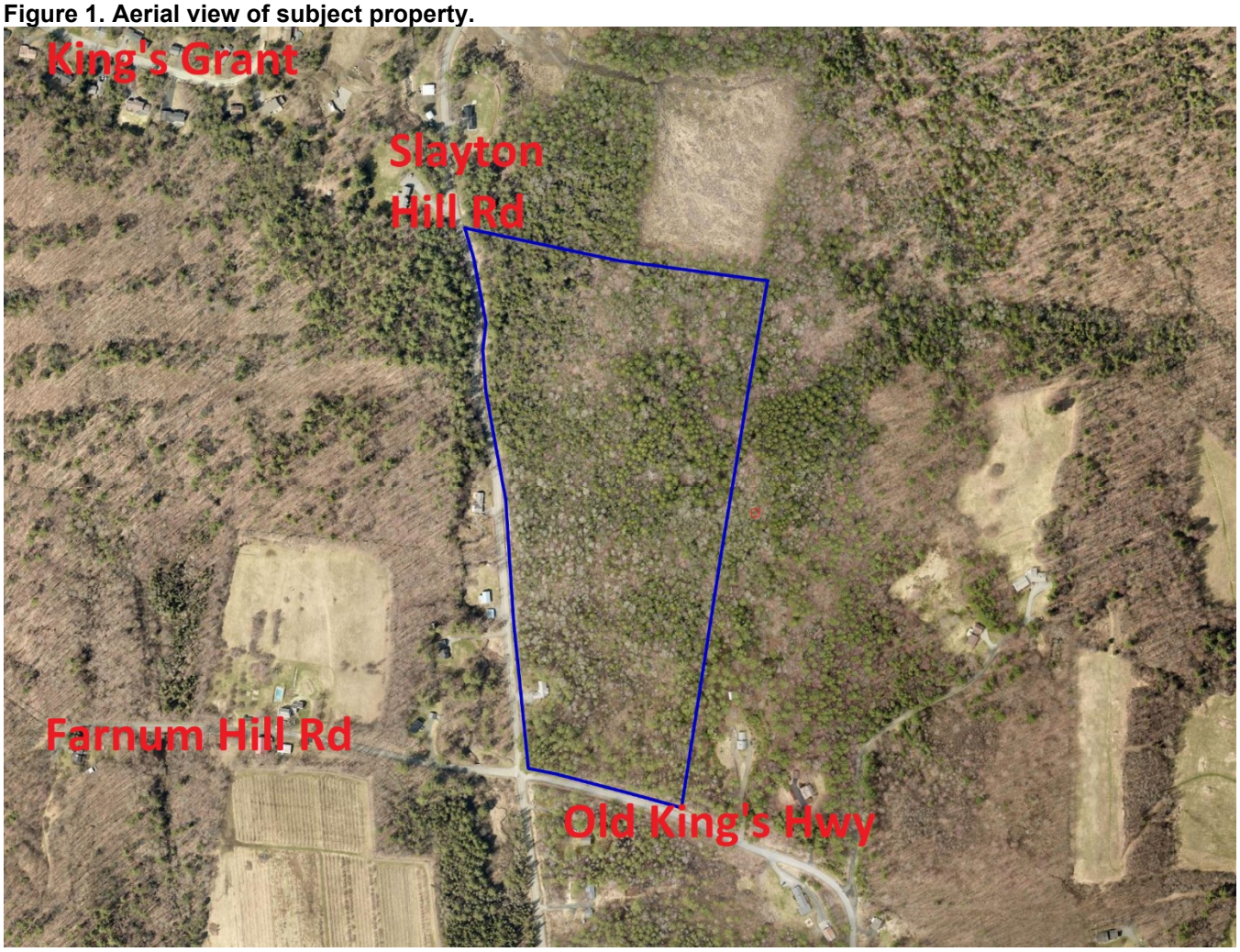

STAFF COMMENTS

ASSESSING
No comment at this time

BUILDING INSPECTION
No comment at this time.

ENGINEERING / PUBLIC WORKS
No comment at this time.

FIRE
As set forth in a memo from Duane Egner, Fire Inspector, dated October 2, 2023, "The Lebanon Fire Department has reviewed this application and has no fire code related concerns."

PLANNING & ZONING:
The proposed lots comply with the minimum lot frontage and lot area requirements for Class 3 lots in the RL-2 District, as set forth in Section 312.3 of the Zoning Ordinance.

As identified in the November 2016 "Lebanon's Wildlife Corridors" study prepared by Rick Van de Poll, a wildlife corridor runs approximately east-to-west through the middle of the subject property. The applicant is encouraged to identify building footprints on Lots 2 and 3 to best accommodate the wildlife corridor. To do so, the footprint on Lot 3 should be as far North as possible, and the footprint on Lot 2 should be as far south as possible, so as to provide the maximum gap. In the alternative, staff recommends that a note is added to the plat to regarding the wildlife corridor and encouraging placement of future homes to accommodate the corridor.

The Planning and Development Department recommends certain changes to the plat which are identified in proposed condition of approval #1 below.

POLICE
No comment at this time.

STAFF RECOMMENDATIONS

If the Board moves to approve this application, then based on the information reviewed by City staff, the Planning and Development Department recommends that the Board approve the application with the following conditions:

Conditions to be Satisfied Prior to the Signing and Recording of the Plat

1. The applicant shall provide a revised plat depicting the following changes to the satisfaction of the Planning and Development Department:
    a. Add Grafton County to the title block (9.5.A.1).
    b. Identify mailing address of the applicant (9.5.A.2).
    c. Identify names and mailing addresses of the easement holder(s) (9.5.A.2).
    d. Identify the zoning districts in which the property is located, and identify the RL-2 and RL-3 district boundary on Lot 3 (9.5.A.4).
    e. Provide the areas of all proposed lots in square feet in addition to acres (9.5.A.6).
    f. Identify the existing wood areas/tree line (9.5.A.7).
    g. Contact the Assessing Department to obtain the tax map/lot numbers for the new lots and add to the plat.
    h. Contact the Police Department to obtain the street addresses for each new lot and add to the plat.
    i. Add a note indicating that the plat was approved pursuant to the City of Lebanon Subdivision Regulations last revised June 28, 2021.
    j. Add Planning Board number (PB2023-13-MIN).
    k. Add a note to the plan that electric, telephone and cable TV distributions systems shall be underground, including services (13.8.C).
    l. Identify acreage and square footage of existing lot.
    m. To address the wildlife corridor identified in the November 2016 "Lebanon's Wildlife Corridors" study, either delineate a building footprint on Lot 3 as far North as possible and a building footprint on Lot 2 as far South as possible to accommodate the wildlife corridor, or add a note referring to the wildlife study and indicating that the corridor would be best protected by placement of any future buildings on Lot 3 as far North as possible, and on Lot 2 as far south as possible.
    n. Provide the date and description of the plat revisions. (9.5.A.1)

2. The applicant shall provide a digital record drawing (Cad .dwg format using NH State Plane Coordinate system or an alternative approved by the City's GIS Coordinator).

General Conditions

3. This approval shall be considered void unless all conditions precedent have been met, and the plat has been recorded in the Registry of Deeds, within two (2) years from the date of the Notice of Action (Section 7.12.B).

4. Future development on the new lots shall be subject to City of Lebanon Impact Fees, pursuant to Section 213 of the Zoning Ordinance. The Impact Fee shall be calculated at the time of Building Permit issuance based on the Impact Fee Schedule adopted on October 12, 2021, and such fees shall be due and payable at the time of issuance of a Certificate of Occupancy. In accordance with RSA 674:39, the approved site plan shall be exempt from any future changes in impact fees and methodology for five years from the date of approval; however, any building permits which are issued after the end of that five-year period shall be fully subject to whatever impact fees and methodology are in effect at the time of building permit issuance.

5. All future construction shall substantially conform with and shall be subject to the requirements and specifications of the recorded plat (Section 7.9.A.2).

Attachments

cc: Vincent & Tarah Cantore
File

CITY OF LEBANON
APPLICATION FOR

SPECIAL EXCEPTION	☐	☐	SITE PLAN REVIEW
VARIANCE	☐	☑	SUBDIVISION
MOTION FOR REHEARING	☐	☐	LOT LINE ADJUSTMENT
APPEAL OF AN ADMIN. DECISION	☐	☐	CONDITIONAL USE PERMIT

☐ OTHER _____

PROPERTY OWNER (APPLICANT):

NAME: Vincent Cantore TEL.#: 802-535-5748

MAILING ADDRESS: 121 Slayton Hill Rd Lebanon NH 03766

E-MAIL ADDRESS: Vcantore1@hotmail.Com

CO-APPLICANT, AGENT, OR LESSEE:

NAME: Tarah Cantore TEL.#: 802-535-9146

MAILING ADDRESS: 121 Slayton Hill Rd Lebanon NH 03766

E-MAIL ADDRESS: Tfcp1@hotmail.Com

PROJECT LOCATION:

TAX MAP #: 134 LOT#: ~~134~~-10 PLOT #: ~~3365~~ ZONE: RL2

STREET ADDRESS OF PROJECT: 121 Slayton Hill Rd

IS THIS PROPERTY LOCATED IN THE: **WETLANDS** ☐ YES ☑ NO **HISTORIC DISTRICT** ☐ YES ☑ NO

FLOOD PLAIN ☐ YES ☑ NO

SCOPE OF PROJECT:

turn the existing lot into 3-12+/- acre lots, I will have the house and the other 2 will be vacant and eventually - Sold.

TYPE OF OCCUPANCY:

EXISTING ☐ VACANT ☑ ONE FAMILY ☐ TWO FAMILY ☐ MULTI-FAMILY ☐ COMMERCIAL ☐ INDUSTRIAL

PROPOSED 2 ☑ VACANT ☐ ONE FAMILY ☐ TWO FAMILY ☐ MULTI-FAMILY ☐ COMMERCIAL ☐ INDUSTRIAL

IF USE IS **COMMERCIAL** OR **INDUSTRIAL**, PLEASE NOTE **SPECIFIC** USE: _____

SIGNATURE BLOCK:

FOR PLANNING BOARD APPLICATIONS ONLY: I, the undersigned, hereby submit this application on the date noted below with the knowledge and understanding that the Planning Board shall determine if the submitted application is complete according to its regulations at its next regularly scheduled meeting on November 14th, 2022, unless I personally request, in writing, that the Board delay its determination of completeness to a later date.

PROPERTY OWNER: Vincent Cantore DATE: 10/6/22

NOTE: IF, AS OWNER, YOU WISH TO DESIGNATE AN AGENT TO ACT ON YOUR BEHALF, PLEASE READ THE FOLLOWING AND SIGN BELOW: I hereby designate the person listed above as my agent for the purpose of procuring the necessary local permits for the proposed work as described herein. Representations made by my agent may be accepted as though made by me personally, and I understand that I am bound by any official decision made on the basis of such representation.

PROPERTY OWNER: [signature] DATE: 10/6/22

DATE RECEIVED	FILE # (MAP/LOT)	APPLICATION #			
2/27/2023	134-10	PB2023-13-MIN			

(Last Revised 4/04/18)

CITY OF LEBANON, NH SUBDIVISION REGULATIONS – TECHNICAL CHECKLIST MINOR SUBDIVISION	
PROJECT NAME: Vincent Cantore	
APPLICANT:	**DATE:** 10/6/22
GENERAL SUBMISSION REQUIREMENTS:	

All applications to the Planning Board for Subdivision Review must be submitted by <u>12:00 Noon</u> on the day of the filing cutoff. [§7.7.C] **Submissions must be accompanied by the following information or review of the application may be delayed:**

- ☐ A properly completed and signed Application Form. [§7.7.A(1)]
- ☐ The appropriate filing fees. [§7.7.A(2)]
- ☐ A written project description. [§7.7.A(3)]
- ☐ A list of the names and mailing addresses of all persons to be notified, by certified mail, of the public hearing. [§7.7.A(4)]
- ☐ A completed and signed Technical Checklist. [§7.7.B]
  [Applicants must complete the entire checklist to ensure that all necessary information and materials have been provided with the application or that written requests for waivers have been properly provided in accordance with Section 7.15 of the Subdivision Regulations, as appropriate.]
- ☐ ~~Eight (8) sets~~ 2 sets of project plans to be distributed for Staff Review. [§9.5.A]
  [A Staff Review meeting is held at City Hall one (1) week following the cutoff date. Staff Review meetings begin at 2:00PM, unless otherwise noted. All revised and/or additional information or materials must be submitted within one (1) week following the Staff Review meeting.]
- ☐ A digital copy of Subdivision plan in .PDF format. [§9.5.B]

<u>NOTE</u>: Applications shall contain sufficient information to enable the City Staff and the Planning Board to evaluate the proposed development for compliance with the Zoning Ordinance, the Planning Board's Regulations, and other applicable City Codes, and for the Planning Board to make an informed decision.

All required application materials shall be submitted as a single inclusive package, including any appropriate waiver requests as permitted by the Regulations. Submission of a complete application package ensures that the review process by City Staff is as efficient and effective as possible.

The purpose of the filing deadline is to provide adequate time for City review of the proposal. Submission of any altered, additional, or substitute application materials required by the Regulations, subsequent to the filing deadline, other than as directed by City Staff, shall cause the application to be deemed untimely filed, and such application shall not be heard until a subsequent month.

PLAN SUBMITTAL TECHNICAL CHECKLIST:

NOTE: Minor Subdivision plans shall include the information described below pursuant to Section 9 of the Lebanon Subdivision Regulations. Plans shall be submitted on sheets no larger than 24" x 36". Plan sets with multiple sheets shall include sheets of uniform size and be bound on the left edge. When more than three (3) sheets are required, an additional cover sheet shall be attached including a table of contents. The scale of the plans shall be appropriate to the size of the overall development. All lettering shall be of a size and type that is legible.

In order to facilitate the use of the City's Geographic Information System (GIS) for planning purposes, all surveys and engineered plans submitted for Subdivision Review shall utilize the NH State Plane Coordinate system and shall reference the North American Vertical Datum of 1988 (NAVD 88), unless prior approval to use an alternate coordinate system and/or vertical datum is granted by the Planning Office.

A written request for waiver shall be required, pursuant to Section 7.15 of the Subdivision Regulations, for any submission requirement for which the information or data is not provided by the applicant. [§9.5.C(5)]

Plan Requirements	Info. Provided	Waiver Sought
9.5.A(1) -		
- Name of the City and County in which the subdivision is proposed;	☐	☐
- A Locus map;	☐	☐
- North arrow;	☐	☐
- Scale of the plat;	☐	☐
- Date of the plat and of any revisions to the plat shall be shown on the first page or cover page, if applicable; (NOTE: The date on the plat at the time of initial submission for application review shall be included on all subsequent submissions to the City. Any subsequent change(s) to the plat shall include a revision date and description of the revision(s).)	☐	☐
9.5.A(2) - Names and mailing addresses of Applicant(s); Owner(s) of Record of subject properties; Owners of abutting properties, including tax map and lot references; and Holders of any easements, rights-of-way, or other restrictions.	☑	☐
9.5.A(3) - Names and business addresses of the surveyor, including license number and seal, and of every engineer, architect, soil scientist, or wetlands scientist whose professional seal appears on any plan or document submitted to the Board.	☐	☐
9.5.A(4) - Zoning District in which the subdivision is located, including district boundaries if in more than one district.	☑	☐
9.5.A(5) - Boundary lines of the overall tract, and each of the proposed lots, including bearings and distances as determined by an actual field survey by a licensed land surveyor, including the date of the completion of the survey. All dimensions shall be shown in feet and decimals. Monuments shall be referenced on the plat as required under Section 13.5(A) of the Regulations.	☐	☐
9.5.A(6) - The area of all proposed lots shall be shown in square feet and acres.	☐	☐

CITY OF LEBANON, NH
SUBDIVISION REGULATIONS - TECHNICAL CHECKLIST
MINOR SUBDIVISION

Plan Requirements *(cont.)*	**Info. Provided**	**Waiver Sought**
9.5.A(7) - Location of all existing structures, easements, permanent and intermittent watercourses, flood plains and wetlands, rock outcrops, wooded areas, and other significant existing features on the property. Indicate those natural and man-made features to be removed, retained, or altered. Wetlands on the property, if any, shall be delineated by a NH Certified Wetlands Scientist, whose seal and signature shall appear on the plat.	❒	❒
9.5.A(8) - If the application covers only a part of the applicant's entire holding, a map of the entire tract shall be drawn at a scale of not smaller than 1" = 400', showing all existing streets and an outline of the platted area.	❒	❒
9.4 - A statement shall be placed on the plat as follows: "A parcel of land which has been reviewed and approved as part of a minor subdivision shall not be eligible for further subdivision review under the Minor Subdivision procedures for a period of three (3) years from the date of the minor subdivision approval."	❒	❒
Supporting Documents and Information, Where Applicable	**Info. Provided**	**Not Applicable**
9.5.C(1) - Proposed covenants or deed restrictions as may be intended to apply to the property in whole or in part to be recorded in the Registry of Deeds.	❒	❒ ✓
9.5.C(2) - Where private individual wastewater systems are proposed, the applicant shall perform soil tests complying with requirements of Section 13.4 of the Regulations. For all proposed lots less than 5 acres in size, the applicant shall have a soil investigation made and a report prepared to establish the existence of at least 4,000 square feet of contiguous area meeting NHDES requirements. NHDES approval of all subdivision lots less than 5 acres in size shall be obtained and provided to the Board prior to the recording of the approved plat. Soil maps and information shall be in accordance with the most current USDA Natural Resource Conservation Service County Soil Maps. Maps prepared by field investigation shall be stamped and signed by a Certified Soil Scientist.	❒	❒
9.5.C(3) - Any access driveway to a State highway shall be approved by the NHDOT and provided to the Board prior to the recording of the approved plat.	❒	❒
9.5.C(4) - Approvals, as prescribed by law, from any other City agency which may have jurisdiction, including but not limited to, wetland permits.	❒	❒

NOTE: THE APPLICANT IS RESPONSIBLE FOR PROVIDING THE REQUIRED INFORMATION PURSUANT TO SECTION 9 OF THE SUBDIVISION REGULATIONS. PLEASE BE AWARE THAT THIS CHECKLIST IS FOR INFORMATION AND GUIDANCE ONLY AND DOES NOT REPRESENT THE LAW DICTATING SUBMITTAL REQUIREMENTS NOR IS IT COMPLETE AND INCLUSIVE THEREOF.

Completed By: Vincent Cantore

Planning office Use Only:

Date Received___/___/___ Checklist Complete YES or NO Checked by:_____

(Last Revised 05/22/13)

THE SUBDIVISION REGULATIONS OF THE CITY OF LEBANON AND THE NOTICE OF ACTION ARE A PART OF THE PLAT, AND THE APPROVAL OF THIS PLAT REQUIRES THE COMPLETION OF ALL THE REQUIREMENTS OF THE NOTICE OF ACTION AND SAID SUBDIVISION REGULATIONS EXCEPTING ONLY ANY MODIFICATION OR WAIVER SET FORTH IN THE NOTICE OF ACTION.

A PARCEL OF LAND WHICH HAS BEEN REVIEWED AND APPROVED AS PART OF A MINOR SUBDIVISION SHALL NOT BE ELIGIBLE FOR FURTHER SUBDIVISION UNDER THE MINOR SUBDIVISION PROCEDURES FOR A PERIOD OF THREE (3) YEARS FROM THE DATE OF THE MINOR SUBDIVISION APPROVAL.

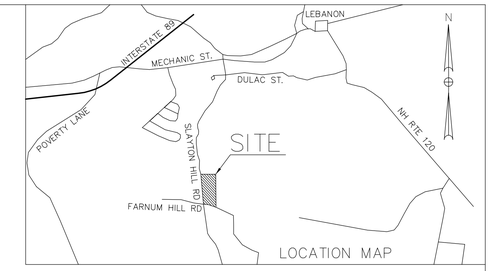

REFERENCE PLANS:
1) PLAN ENTITLED: "PROPOSED MINOR LOT LINE ADJUSTMENT FOR, JUSTIN CARVER AND JUSTIN & VICTORIA CARVER (F'LY CRAWFORD)", 75 & 77 SLAYTON HILL ROAD, LEBANON, NH" PREPARED BY CARDIGAN MOUNTAIN LAND SURVEYS, LLC, DATED MARCH 11, 2019 (REV. 05/17/2019) AND RECORDED AT G.C.R.D. AS PLAN #15728
2) PLAN ENTITLED: "SUBDIVISION PLAN, AUDRA D. SMITH & LOIS HULL", TAX MAP 120 LOT 3, LEBANON, NEW HAMPSHIRE PREPARED BY HOLDEN ENGINEERING AND SURVEYING, INC., DATED 12-30-11. RECORDED IN G.C.R.D. PLAN #14193
3) PLAN ENTITLED: "SUBDIVISION OF JOAN LACHANCE", PREPARED BY T&M SURVEYS, INC., DATED DECEMBER 1986 RECORDED IN G.C.R.D. PLAN #4136
4) PLAN ENTITLED: "PLAN OF LAND BELONGING TO EDMOND GOODWIN", LEBANON. NH PREPARED BY L.P. DAVIS, DATED JULY 18, 1968 RECORDED IN G.C.R.D. BK.1073 PG.85

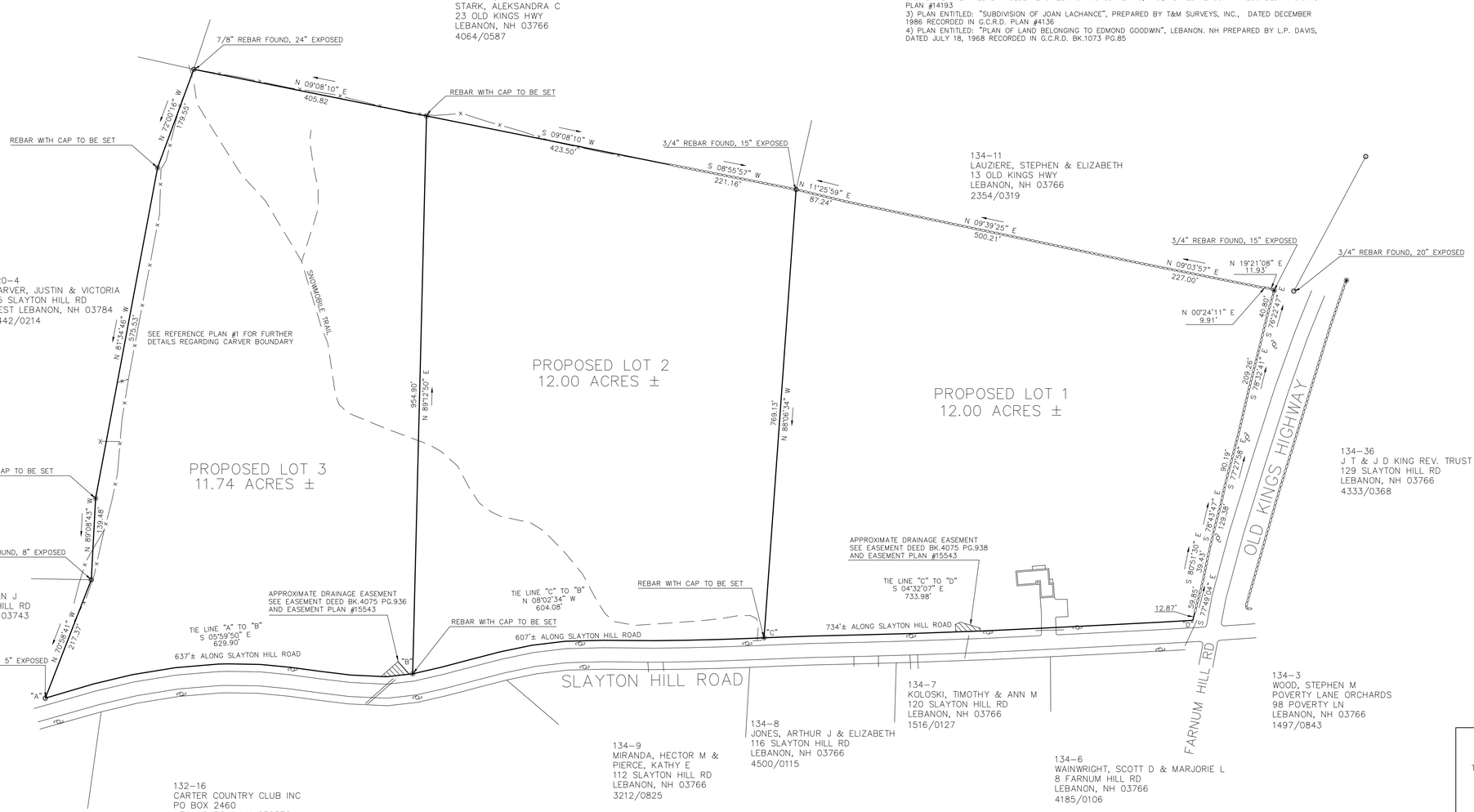

SURVEYOR'S CERTIFICATION

I CERTIFY THAT THIS PLAN IS THE RESULT OF AN ACTUAL FIELD SURVEY MADE ON THE GROUND AND HAS A MAXIMUM ERROR OF CLOSURE OF ONE PART IN TEN THOUSAND ON ALL PROPERTY LINES WITHIN AND BORDERING THE SUBJECT PROPERTY.

GRAPHIC SCALE

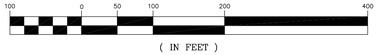

(IN FEET)
1 inch = 100 ft.

LEGEND

- REBAR WITH CAP TO BE SET
- MONUMENT FOUND
- CONCRETE BOUND FOUND
- x —— BARBED WIRE FENCE REMNANTS
- STONE WALL
- UTILITY POLE
- —— TRAIL

SUBDIVISION PLAN

THE VINCENT A. CANTORE AND TARAH F. CANTORE REVOCABLE TRUST
VINCENT A. CANTORE & TARAH F. CANTORE TRUSTEES
TAX MAP 134 LOT 10
121 SLAYTON HILL ROAD
LEBANON, NEW HAMPSHIRE

PREPARED BY

PATON LAND SURVEYING

150 SOUTHRIDGE STREET, SPRINGFIELD, VT 05156

DATE: AUGUST 24, 2023	SCALE: 1"=100'
DRAWN BY T.R.	CK'D BY CTP
SURVEYED BY T.R., J.R.	

121 Slayton Hill Rd_PB2023-13-MIN_Staff Comments

Tim Corwin <Tim.Corwin@lebanonnh.gov>

Wed 9/27/2023 7:33 PM

To:vcantoret@hotmail.com <vcantoret@hotmail.com>
Cc:Crystal Taplin <Crystal.Taplin@lebanonnh.gov>;Brian Vincent <brian.vincent@lebanonnh.gov>

Dear applicant -

Below are staff's comments on the proposed 3-lot minor subdivision of 121 Slayton Hill Rd (Tax Map 134, Lot 10), which you have submitted for a hearing at the Planning Board's October 9th meeting. Please address staff's comments and send digital copies of all revised plans and materials by the end of the day on **Tuesday, October 3rd**, as follows:

- Everything can be submitted electronically via e-mail to planning@lebanonnh.gov.
    - Please submit two electronic copies of each document in your application, as follows:
        - One saved as a PDF; and
        - One saved as a PDF-A.
    - Additionally, we'll need eleven (11) 11x17 size hard copies of the revised plan set and one (1) full-size hard copy.

0. When resubmitting in response to staff's comments, please submit all materials that you would like included as part of your application and presented to the Planning Board.

- So that we can expeditiously upload documents to our on-line public portal, please name all electronic documents using the following convention: **"year-month-day_PB2023-13-MIN_(description of document)"**. So, for example, if you resubmit on 10/3, the PDF of your revised plat would be titled, **"2023-10-03_PB2023-13-MIN_revised plat".**

- For tracking purposes and clarity, please provide a cover letter or transmittal memo with your resubmission identifying each document that is included with the submission.

- We would also appreciate, if possible, a written reply to each of the comments below if your response is not otherwise evident from your revised materials.

Thank you. If you have any questions, please don't hesitate to ask. -Tim

STAFF COMMENTS - *please note that parenthetical references are to Section numbers of the Lebanon Subdivision Regulations.*

1. Separate from the plat, please provide a written project description as required by Section 7.7.A.3 of the Subdivision Regulations.
2. Add a note to address Section 7.7.A.4.e ("All persons holding conservation, preservation, or agricultural preservation restrictions (as defined under RSA 477:45) on the subject property. (NOTE: When there are no such restrictions on the subject property, the Applicant shall provide a definitive statement to that effect.))
3. Add a note to address 7.7.A.4.f ("The holders of any easements, rights-of-way, or other restrictions on or over the subject property. (NOTE: When there are no such easements, rights-of-way, or other restrictions on the subject property, the Applicant shall provide a definitive statement to that effect.))
4. Add Grafton County to the title block (9.5.A.1)

5. Identify mailing address of the applicant (9.5.A.2)
6. Identify mailing addresses of the easement holder(s) (9.5.A.2)
7. Identify the zoning districts in which the property is located, and identify the district boundary (proposed Lot 3 is split zoned RL-2 and RL-3) (9.5.A.4)
8. Identify the date of the survey was completed as required per Section 9.5.A.5. Please note that this refers to the date the actual field survey was performed, which is distinct from the date of the plat.
9. Contact the Assessing Department to confirm the tax map/lot number for the new lots and add to the plat.
10. Provide the areas of all proposed lots in square feet in addition to acres (9.5.A.6).
11. Identify the existing wood areas/tree line (9.5.A.7).
12. Demonstrate compliance with Section 13.3.A ("The subdivider shall demonstrate on each lot that there is a feasible location for a safe and convenient access for a driveway without unreasonable grades. Steep driveways in excess of 10% grade are prohibited unless the Fire Department allows a steeper driveway to be provided.")
13. Demonstrate compliance with Section 13.8.A.1 which provides that, "In any subdivision requiring on-lot water source, the subdivider shall demonstrate to the satisfaction of the Board that each lot can be served by an on-lot water source in sufficient quality and quantity."
14. Add a note to the plan that electric, telephone and cable TV distributions systems shall be underground, including services (13.8.C).
15. Add a note indicating that the plat was approved pursuant to the City of Lebanon Subdivision Regulations last revised June 28, 2021.
16. Add Planning Board number (PB2023-13-MIN).
17. Provide date and description of revisions made (9.5.A.1)
18. Please address Section 9.5.C.2 which requires compliance with Section 13.4.A of the Subdivision Regulations. I've pasted Section 13.4.A below for quick reference. Note that the reference to Section 13.19 in subsection A.4 below is a typographical error and is intended to reference Section 13.18. I've pasted Section 13.18 below.

13.4 Lots/Lot Area/On-Site Septic System Requirements

A. Lot Sizes and Areas. The minimum lot size for each lot shall be in conformity with the Zoning Ordinance. In addition, where there is to be an on-site subsurface sewage disposal system, additional area may be required based on the following:

1. For each lot in the proposed subdivision requiring a subsurface sewage disposal system, soil data shall be provided using Site Specific Soil Maps for New Hampshire and Vermont SSSNNE Special Publication No. 3, June, 1997.

2. The tests and soil mapping for required soil information shall be performed by a certified soil scientist.

3. The report of the certified soil scientist shall establish that there is at least 4,000 square feet of contiguous area suitable for the placement of an individual sewage disposal system on each lot.

4. In the case of a subdivision resulting in the creation of lots in excess of five (5) acres, the subdivider may request a waiver under Section 13.19 from the requirements of the investigation and report as to soil data.

13.18 Modifications or Waivers of Design Standards

A subdivider may request the modification or waiver of a design standard contained in Section 13. The Board may grant such request if it determines that compliance is not required to meet the purpose and intent of these Regulations and that the public good will not be adversely affected.

Tim Corwin, AICP
Deputy Planning and Development Director
City of Lebanon
51 North Park Street
Lebanon, NH 03766
(603) 448-1524 (Office)
(603) 442-6127 (Direct)
TIM.CORWIN@LEBANONNH.GOV
WWW.LEBANONNH.GOV
Book a time to meet with me

AICP CERTIFIED

City Hall Hours:
Monday-Thursday, 7am – 5pm (No Friday Hours)

NOTICE: THIS E-MAIL AND ANY REPLY TO THIS E-MAIL MAY BE CONSIDERED A "GOVERNMENTAL RECORD" PER NH RSA 91-A:1-A. THE CITY OF LEBANON IS REQUIRED TO MAKE GOVERNMENTAL RECORDS AVAILABLE TO THE PUBLIC UPON REQUEST, IN ACCORDANCE WITH NH RSA 91-A:4. THE CITY IS ALSO REQUIRED TO RETAIN GOVERNMENTAL RECORDS FOR MINIMUM PERIODS OF TIME AS SET FORTH IN NH RSA 33-A:3-A.

1.) Subdividing 35.57 (134-10) into three equal +/- lots keeping the lot with my house and selling the other 2 lots.

2.) There are no restrictions of the lots. 7.7.A.4.e

3.) There are no restrictions of the lots. 7.7.A.4.f

4.) ✓ I tried to get in touch with the surveyor but with no luck. I am confident it can happen with more notice.

5.) 121 Slayton Hill Rd. Lebanon, NH 03766
(mailing address: Vincent & Tarah Cantore)

6.) N/A

7.) RL2

8.) 8/3/2023

9.) 134-10, 134-10-100, 134-10-200
House Lot

10.) 516,186 ft^2 +/-

11.) Except for the house area at 121 Slayton Hill Rd. The entire property is wooded.

12.) As can be seen from the road (Slayton Hill Rd) the land is fairly level and increases as you go towards the rear of the lots being subdivided.

13.) All houses have wells on Slayton Hill. there would be no reason to expect any problems for the vacant lots. We are selling with the expectation that the buyer would not have any difficulties

14.) ✓ done

15.) ✓ done

16.) ✓ done

17.) 8/24/2023

Planning Board # PB2023-13-MIN

THE SUBDIVISION REGULATIONS OF THE CITY OF LEBANON AND THE NOTICE OF ACTION ARE A PART OF THE PLAT, AND THE APPROVAL OF THIS PLAT REQUIRES THE COMPLETION OF ALL THE REQUIREMENTS OF THE NOTICE OF ACTION AND SAID SUBDIVISION REGULATIONS EXCEPTING ONLY ANY MODIFICATION OR WAIVER SET FORTH IN THE NOTICE OF ACTION.

A PARCEL OF LAND WHICH HAS BEEN REVIEWED AND APPROVED AS PART OF A MINOR SUBDIVISION SHALL NOT BE ELIGIBLE FOR FURTHER SUBDIVISION UNDER THE MINOR SUBDIVISION PROCEDURES FOR A PERIOD OF THREE (3) YEARS FROM THE DATE OF THE MINOR SUBDIVISION APPROVAL.

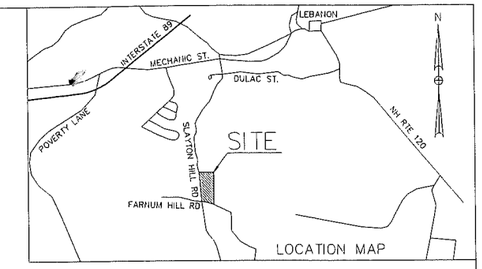

N NH GRID

REFERENCE PLANS:
1) PLAN ENTITLED: "PROPOSED MINOR LOT LINE ADJUSTMENT FOR, JUSTIN CARVER AND JUSTIN & VICTORIA CARVER (F'LY CRAWFORD)", 75 & 77 SLAYTON HILL ROAD, LEBANON, NH" PREPARED BY CARDIGAN MOUNTAIN LAND SURVEYS, LLC, DATED MARCH 11, 2019 (REV. 05/17/2019) AND RECORDED AT G.C.R.D. AS PLAN #15728
2) PLAN ENTITLED: "SUBDIVISION PLAN, AUDRA D. SMITH & LOIS HULL" TAX MAP 120 LOT 3, LEBANON, NEW HAMPSHIRE PREPARED BY HOLDEN ENGINEERING AND SURVEYING, INC., DATED 12-30-11. RECORDED IN G.C.R.D. PLAN #14193
3) PLAN ENTITLED: "SUBDIVISION OF JOAN LACHANCE". PREPARED BY T&M SURVEYS, INC., DATED DECEMBER 1986 RECORDED IN G.C.R.D. PLAN #4136
4) PLAN ENTITLED: "PLAN OF LAND BELONGING TO EDMOND GOODWIN". LEBANON. NH PREPARED BY L.P DAVIS, DATED JULY 18, 1968 RECORDED IN G.C.R.D. BK.1073 PG.85

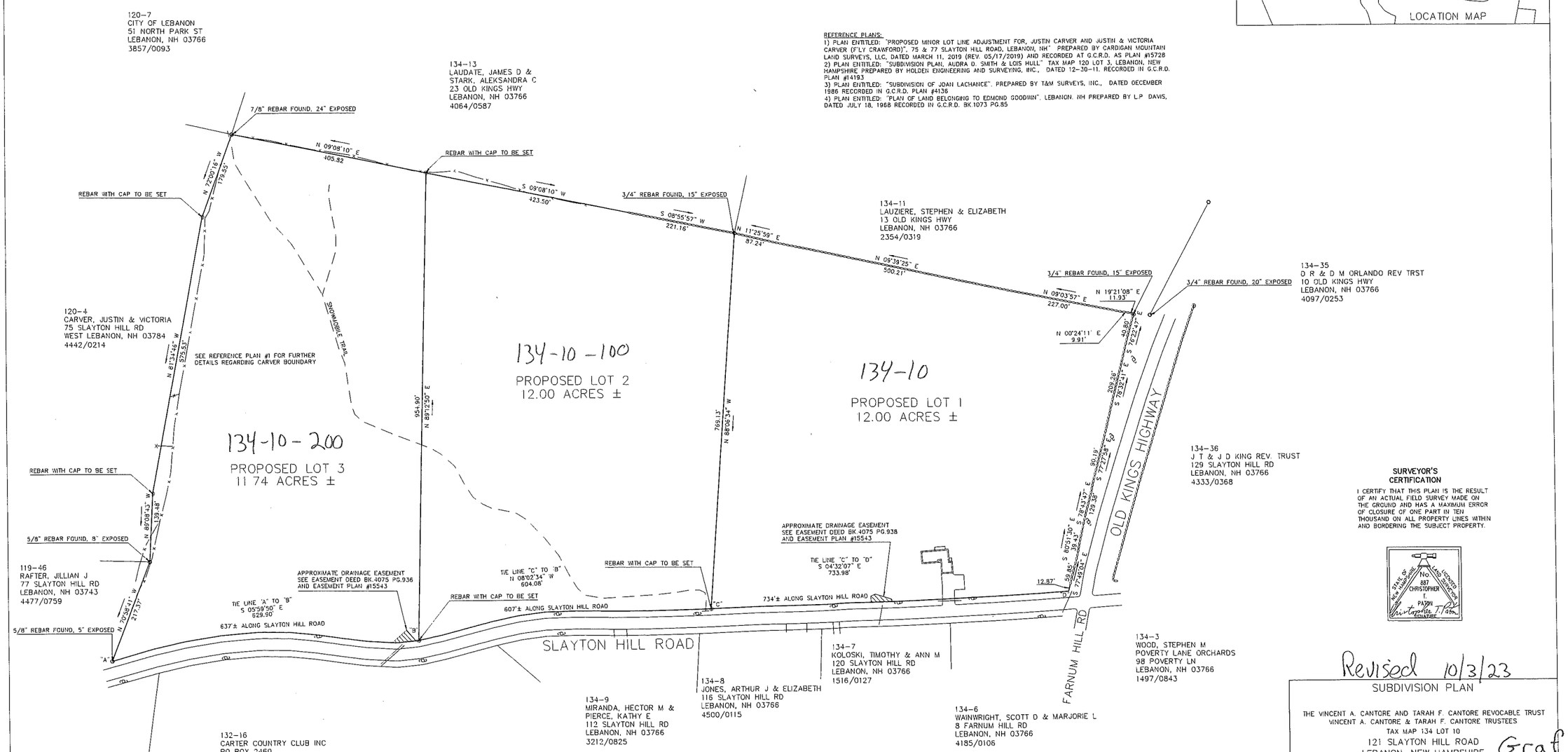

SURVEYOR'S CERTIFICATION

I CERTIFY THAT THIS PLAN IS THE RESULT OF AN ACTUAL FIELD SURVEY MADE ON THE GROUND AND HAS A MAXIMUM ERROR OF CLOSURE OF ONE PART IN TEN THOUSAND ON ALL PROPERTY LINES WITHIN AND BORDERING THE SUBJECT PROPERTY.

STATE OF NEW HAMPSHIRE — LICENSED LAND SURVEYOR — No. 887 — CHRISTOPHER T. PATON — SIGNATURE

GRAPHIC SCALE

100 0 50 100 200 400

(IN FEET)
1 inch = 100 ft.

LEGEND

- REBAR WITH CAP TO BE SET
- MONUMENT FOUND
- CONCRETE BOUND FOUND
- BARBED WIRE FENCE REMNANTS
- STONE WALL
- UTILITY POLE
- TRAIL

Revised 10/3/23

SUBDIVISION PLAN

THE VINCENT A. CANTORE AND TARAH F. CANTORE REVOCABLE TRUST
VINCENT A. CANTORE & TARAH F. CANTORE TRUSTEES
TAX MAP 134 LOT 10
121 SLAYTON HILL ROAD
LEBANON, NEW HAMPSHIRE

Grafton County

PREPARED BY

PATON LAND SURVEYING

150 SOUTHRIDGE STREET, SPRINGFIELD, VT 05156

DATE: AUGUST 24, 2023	SCALE: 1"=100'
DRAWN BY T.R.	CK'D BY CTP
SURVEYED BY T.R., J.R.	

Underground=All Utilities on 134-10-200 and 134-10-100

CITY OF LEBANON ~ PLANNING & DEVELOPMENT

PLANNING BOARD

October 13, 2023 Meeting

Staff Memorandum – PB2022-42-BLA

APPLICATION INFORMATION

Agenda Item: 3.B

Application ID: PB2022-42-BLA

Application Type:
Boundary Line Adjustment

Property Location & Tax Map:
- 30 Little Heater Rd (Tax Map 78, Lot 61)
- 1 Edwards St (Tax Map 78, Lot 56)

Property Owners/Applicants:
Johanna Cicotte & Edwards Properties, LLC

Property Sizes (existing):
- 30 Little Heater Road (Tax Map 78, Lot 61): +/-1.71 acres *per boundary line adjustment plat*
- 0 Edwards Street (Tax Map 78, Lot 56): +/-6.48 acres *per proposed boundary line adjustment plat*

Property Sizes (proposed):
- 30 Little Heater Road (Tax Map 78, Lot 61): +/-2.15 acres
- 0 Edwards Street (Tax Map 78, Lot 56): +/-6.04 acres

Zoning District:
Light Industrial (IND-L)

Zoning Overlay District(s):
Wetlands Conservation District

LEGAL NOTICE

Johanna Cicotte & Edwards Properties, LLC, 30 Little Heater Road (Tax Map 78, Lot 61) and 1 Edwards Street (Tax Map 78, Lot 56), zoned IND-L: Request for a Boundary Line Adjustment. PB2022-42-BLA

PLANS AND APPLICATION MATERIALS

- Application form
- Letter dated September 20, 2022, from Daniel Nash, PE, of Advanced Geomatics & Design (support statement; 1 page)
- Letter dated October 20, 2022, from Daniel Nash, PE, of Advanced Geomatics & Design (response to staff comments; 2 page)
- Subdivision Regulations - Technical Checklist (3 pages)
- Plat titled "Boundary Line Adjustment Plan - Johanna Marie Cicotte and Edwards Properties, LLC", prepared by Paton Land Surveying, LLC, dated August 30, 2022, last revised January 12, 2023, Project No. 2021-282-60A

COMPLETENESS REVIEW

This application was previously deemed incomplete by the Board on December 12, 2023. However, as a result of staff oversight, no deadline was given by the Board for submitting a complete application. Consequently, staff accepted the revised plat (referenced above) as an update to the original application filed in September, 2022, without requiring the applicant to also submit new application materials and paying a new application fee. This is why the application number has a PB2022 prefix and is why the applicant's letters and Technical Checklist date from 2022.

The updated application (which includes the original materials submitted in 2022 and the updated plat submitted in 2023) has been reviewed in accordance with the Lebanon Subdivision Regulations. The Planning and Development Department recommends that the Board find that the application is now complete enough to accept jurisdiction and to commence review.

APPLICATION OVERVIEW

This is a request for a Boundary Line Adjustment between vacant lands located at 30 Little Heater Rd (Tax Map 78, Lot 61) and 1 Edwards St (Tax Map 78, Lot 56). As proposed, the changes resulting from the Boundary Line Adjustment are as follows:

- Map/Lot 78-61 will increase by a net of +/-0.44 acres, from +/-1.71 acres to +/-2.15 acres.
- Map/Lot 78-56 will decrease by a net of +/-0.44 acres, from +/-6.48 acres to +/-6.04 acres.

The reconfigured lots are illustrated on the attached plat as follows, with notes in red and blue added by staff:

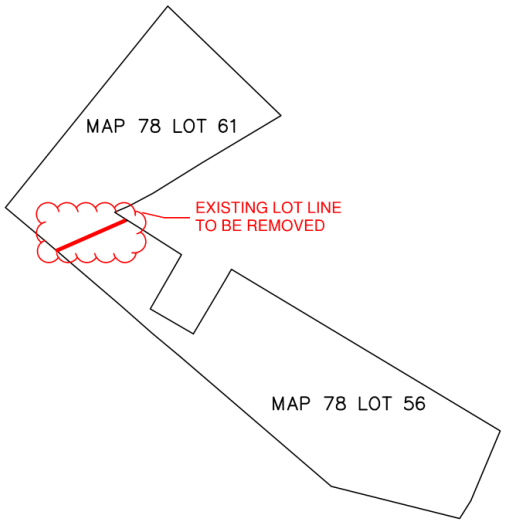

LOTS BEFORE BOUNDARY ADJUSTMENT

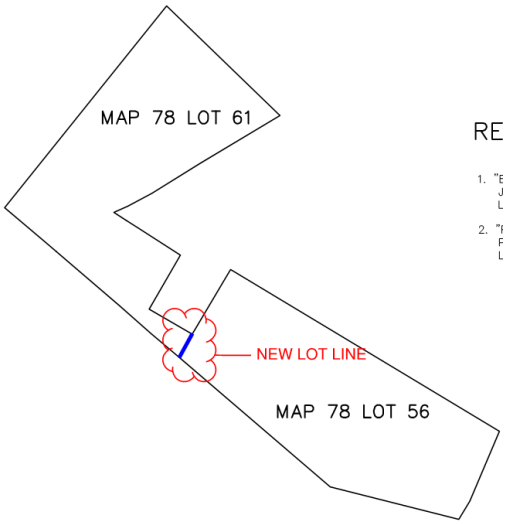

LOTS AFTER BOUNDARY ADJUSTMENT

Note that the lot 78-56 boundaries depicted in the graphic above are inaccurate and will need to be updated prior to recording of the plat.

STAFF COMMENTS

ASSESSING
No comment.

BUILDING INSPECTION
No comment.

FIRE
As set forth in a memo from Duane Egner, Fire Inspector, dated October 2, 2023, "The Lebanon Fire Department has reviewed this application and has no fire code related concerns."

POLICE
No comment.

PUBLIC WORKS/CITY ENGINEER
No comment.

PLANNING & ZONING
The current configuration of Lot 78-56 is the result of a series of prior boundary line adjustments, voluntary mergers, and road discontinuances, including a Voluntary Lot Merger of Tax Map 78, Lot 56; Tax Map 78, Lot 58; and Tax Map 78, Lot 49 (PB2023-32-VLM) approved on 9/13/23. Confusingly, the proposed boundary line plat shows the lot lines that were eliminated by this most recent Voluntary Lot Merger. The plat also contains three groups of notes for 78-56, 78-58, and 78-49 which further obscures the fact that there is now only one single lot (which is 78-56). Staff recommends the plat is amended to clarify and avoid unnecessary confusion – see proposed condition of approval 1.f.

STAFF RECOMMENDATIONS

If the Board moves to approve the application, then based on the information reviewed by City staff, the Planning and Development Department recommends that the Board approve with the following conditions to be satisfied prior to the signing and recording of the plat:

1. The applicant shall provide a revised plat depicting the following changes to the satisfaction of the Planning and Development Department:
    a. Remove boundary lines within the former Edwards Street and Foch Street rights-of-ways that were eliminated with the voluntary merger of Lots 78-56, 78-49, and 78-58.
    b. For clarity, add recording information for reference plans 1 and 2.
    c. For clarity, add "See Ref Plan 2" to Note 5.
    d. Correct "Lots Before Boundary Adjustment" and "Lots After Boundary Adjustment" graphics to accurately depict Lot 78-56.
    e. For clarity, remove all references to lots that no longer exist and/or add a new note (Note 6) regarding the history of Lot 78-56. In the alternative, update notes for Lot 78-56 to identify Lot 78-49 as one of the former lots, include related deed reference, and identify recording information for the Voluntary Lot Merger of Tax Map 78, Lot 56; Tax Map 78, Lot 58; and Tax Map 78, Lot 49 (PB2023-32-VLM) approved on 9/13/23.
    f. Provide revision date and description of revisions.

2. The applicant shall provide to the Planning and Development Department a draft copy of the deed of the land transfer for review to ensure the transfer will be completed properly for Assessing and recording purposes.

3. The applicant shall provide to the Planning and Development Department a digital record drawing (Cad .dwg Format using NH State Plane Coordinate system).

Attachments

cc (via e-mail): Johanna Cicotte (jcicotte1@aol.com)
Dan Nash (advancedgeomatics@comcast.net)
File

APPLICATION FOR

SPECIAL EXCEPTION	☐	☐	SITE PLAN REVIEW
VARIANCE	☐	☐	SUBDIVISION
MOTION FOR REHEARING	☐	☒	LOT LINE ADJUSTMENT
APPEAL OF AN ADMIN. DECISION	☐	☐	CONDITIONAL USE PERMIT

☐ OTHER _____

PROPERTY OWNER (APPLICANT):

NAME: Johanna M. Cicotte TEL.#: Tel#: 603-448-6363

MAILING PO Box 1010, Lebanon, NH 03766

E-MAIL ADDRESS: jcicotte1@aol.com

CO-APPLICANT, AGENT, OR LESSEE:

NAME: Dan Nash TEL.#: 802-356-4928

MAILING ADDRESS: 105 Bank St, Lebanon, NH 03766

E-MAIL ADDRESS: AdvancedGeomatics@comcast.net

PROJECT LOCATION:

TAX MAP #: 78 LOT#: 61 PLOT #: ZONE: IND-L

STREET ADDRESS OF PROJECT: 30 Little Heater Road

IS THIS PROPERTY LOCATED IN THE: **WETLANDS** ☒ YES ☐ NO **HISTORIC DISTRICT** ☐ YES ☒ NO

FLOOD PLAIN ☒ YES ☐ NO

SCOPE OF PROJECT:

Adjust Lot 78-61 to make it the minimum size to conform to zoning.

TYPE OF OCCUPANCY:

EXISTING ☒ VACANT ☐ ONE FAMILY ☐ TWO FAMILY ☐ MULTI-FAMILY ☐ COMMERCIAL ☐ INDUSTRIAL

PROPOSED ☒ VACANT ☐ ONE FAMILY ☐ TWO FAMILY ☐ MULTI-FAMILY ☐ COMMERCIAL ☐ INDUSTRIAL

IF USE IS **COMMERCIAL** OR **INDUSTRIAL**, PLEASE NOTE **SPECIFIC** USE: vacant

SIGNATURE BLOCK:

FOR PLANNING BOARD APPLICATIONS ONLY: I, the undersigned, hereby submit this application on the date noted below with the knowledge and understanding that the Planning Board shall determine if the submitted application is complete according to its regulations at its next regularly scheduled meeting on _____, 20____, unless I personally request, in writing, that the Board delay its determination of completeness to a later date.

PROPERTY OWNER: _____ DATE: 9/19/2022

NOTE: IF, AS OWNER, YOU WISH TO DESIGNATE AN AGENT TO ACT ON YOUR BEHALF, PLEASE READ THE FOLLOWING AND SIGN BELOW: I hereby designate the person listed above as my agent for the purpose of procuring the necessary local permits for the proposed work as described herein. Representations made by my agent may be accepted as though made by me personally, and I understand that I am bound by any official decision made on the basis of such representation.

PROPERTY OWNER: _____ DATE: _____

DATE RECEIVED	FILE # (MAP/LOT)	APPLICATION #	FEE - $ AMOUNT	DATE PAID	VOUCHER #

AGD
Advanced Geomatics
& Design

20 September 2022

Tim Corwin, Planning Office
City of Lebanon
51 North Park Street
Lebanon, NH 03766

Re: Support Statement
Boundary Line adjustment Plan Lots 78-61 & 78-54
Little Heater Road

Dear Mr. Corwin:

We provide the following support statement information:

1. Consultants. The team members are listed in the abutters list.
2. Restrictions. We are not aware of any conservation, preservation, or agricultural preservation restrictions on the subject parcel.
3. Utilities. The site is currently served by electric, telephone, and cable services.
4. Zoning. The zoning is IND-L.
5. Project Description. The owner removed the residential structures on former Lot 78-61&78-54. The owner petitioned the city for discontinuance of a portion of Little Heater road. The discontinuance was approved and subject to a utility easement for water and sewer. The adjusted Lot 78-61 meets the minimum lot size, 2.15Ac v. 2.0Ac.

Please let me know if you need further information to support this application

Sincerely,

Daniel A. Nash, PE
Principal

CC: Johanna Cicotte
Barry Schuster

M:\2020_projeccts\20-011\planning_board\bla2\col_littleheater_BLA_20sep2022.doc

AGD
Advanced Geomatics
& Design

20 October 2022

Tim Corwin, Planning Office
City of Lebanon
51 North Park Street
Lebanon, NH 03766

Re: Response to review email dated 18Oct22
Boundary Line adjustment Plan Lots 78-61 & 78-54
Little Heater Road

Dear Mr. Corwin:

We provide the following responses to your review:

1. Plat. Lot 78-54 does not need a variance. The intent is to merge Lot 78-54 with the other two lots upon recording of the deeds for the discontinued streets. The discontinuance was approved by the city council on 3Nov21. There is no need to prepare distorted or progress plans that have no use or meaning. Approval should include a simple condition that the BLA plat not be recorded until all of the supporting or precedent actions have been completed.

Prior to recording of this plat, the following actions are necessary:
-discontinue water and sewer services and erect two signs per Jim Donison, PE, letter. This item is intended to be completed by 1Nov.
-City issues deeds to discontinued roads.
-Discontinuance of roads plat recorded.
-Deeds to city for utilities and turn-arounds recorded.
-Lot merger applied for, for 3 lots shown on discontinuance plat: Lot 78-54, Lot 78-58 and Lot 78-48.
-BLA plat recorded. I recommend the recording of the plat be conditioned upon the above items being completed.

Note: the above noted deeds have been prepared and approved by the City's attorney.

2. Plat visibility. The plat contains an inset that clearly shows what the shapes of lots are before and after. Plats cannot be recorded if they contain color. So, I have prepared and exhibit with color for your understanding.

3. Easements. The holder of all the easements will be the city of Lebanon. The revised plan now indicates this.

4. Abutters. The abutters have been added to the revised plan and the abutters list.

5. Lot 78-54. We presume this is the correct lot #. The recorded planning action to merge the lots indicated this as the first number, presumably the new number. Please inform us is this is not the case.

6. Subject properties. Addresses have been added to the revised plan.

7. Submittal. This seems like a burdensome and electronically huge undertaking. However, it has been done and is being submitted via Dropbox.

8. Naming. Files have been named per your convention.

9. PDF. Files as requested are in the drop box file.

Please let me know if you need further information regarding this response.

Sincerely,

Daniel A. Nash, PE
Principal

CC: Johanna Cicotte
Barry Schuster

M:\2020_projeccts\20-011\planning_board\bla2\col_littleheater_BLA_26oct2022.docx

CITY OF LEBANON, NH SUBDIVISION REGULATIONS – TECHNICAL CHECKLIST MINOR LOT LINE ADJUSTMENT / BOUNDARY LINE AGREEMENT	
PROJECT NAME: 30 Little Heater Road	
APPLICANT: Johanna M. Cicotte	**DATE:** 20 September 2022
GENERAL SUBMISSION REQUIREMENTS:	

All applications to the Planning Board for Subdivision Review must be submitted by <u>12:00 Noon</u> on the day of the filing cutoff. [§7.7.C] **Submissions must be accompanied by the following information or review of the application may be delayed:**

- ☒ A properly completed and signed Application Form. [§7.7.A(1)]
- ☒ The appropriate filing fees. [§7.7.A(2)]
- ☒ A written project description. [§7.7.A(3)]
- ☒ A list of the names and mailing addresses of all persons to be notified, by certified mail, of the public hearing. [§7.7.A(4)]
- ☒ A completed and signed Technical Checklist. [§7.7.B]
  [Applicants must complete the entire checklist to ensure that all necessary information and materials have been provided with the application or that written requests for waivers have been properly provided in accordance with Section 7.15 of the Subdivision Regulations, as appropriate.]
- ☒ Eight (8) sets of project plans to be distributed for Staff Review. [§8.2.A]
  [A Staff Review meeting is held at City Hall one (1) week following the cutoff date. Staff Review meetings begin at 2:00PM, unless otherwise noted. All revised and/or additional information or materials must be submitted within one (1) week following the Staff Review meeting.]
- ☒ A digital copy of Subdivision plan in .PDF format. [§8.2.B]

<u>NOTE: Applications shall contain sufficient information to enable the City Staff and the Planning Board to evaluate the proposed development for compliance with the Zoning Ordinance, the Planning Board's Regulations, and other applicable City Codes, and for the Planning Board to make an informed decision.</u>

<u>All required application materials shall be submitted as a single inclusive package, including any appropriate waiver requests as permitted by the Regulations. Submission of a complete application package ensures that the review process by City Staff is as efficient and effective as possible.</u>

<u>The purpose of the filing deadline is to provide adequate time for City review of the proposal. Submission of any altered, additional, or substitute application materials required by the Regulations, subsequent to the filing deadline, other than as directed by City Staff, shall cause the application to be deemed untimely filed, and such application shall not be heard until a subsequent month.</u>

PLAN SUBMITTAL TECHNICAL CHECKLIST:

NOTE: Minor Lot Line Adjustment / Boundary Line Agreement plans shall include the information described below pursuant to Section 8 of the Lebanon Subdivision Regulations. Plans shall be submitted on sheets no larger than 24" x 36". Plan sets with multiple sheets shall include sheets of uniform size and be bound on the left edge. When more than three (3) sheets are required, an additional cover sheet shall be attached including a table of contents. The scale of the plans shall be appropriate to the size of the overall development. All lettering shall be of a size and type that is legible.

In order to facilitate the use of the City's Geographic Information System (GIS) for planning purposes, all surveys and engineered plans submitted for Subdivision Review shall utilize the NH State Plane Coordinate system and shall reference the North American Vertical Datum of 1988 (NAVD 88), unless prior approval to use an alternate coordinate system and/or vertical datum is granted by the Planning Office.

A written request for waiver shall be required, pursuant to Section 7.15 of the Subdivision Regulations, for any submission requirement for which the information or data is not provided by the applicant. [§8.2.C]

Plan Requirements	**Info. Provided**	**Waiver Sought**
8.2.A(1) - - Name of the City and County in which the subdivision is proposed; - A Locus map; - North arrow; - Scale of the plat; - Date of the plat and of any revisions to the plat; (NOTE: The date on the plat at the time of initial submission for application review shall be included on all subsequent submissions to the City. Any subsequent change(s) to the plat shall include a revision date and description of the revision(s).)	☒ ☒ ☒ ☒ ☒	❒ ❒ ❒ ❒ ❒
8.2.A(2) - Names and mailing addresses of Applicant(s); Owner(s) of Record of subject properties; Owners of abutting properties, including tax map and lot references; and Holders of any easements, rights-of-way, or other restrictions.	☒	❒
8.2.A(3) - Names and business addresses of the surveyor, including license number and seal, and of every engineer, architect, soil scientist, or wetlands scientist whose professional seal appears on any plan or document submitted to the Board.	☒	❒
8.2.A(4) - Zoning District in which the subject lots are located, including district boundaries if in more than one district.	☒	❒
8.2.A(5) - Location of all existing structures on the subject lots.	☒	❒
8.2.A(6) - Site location map showing the original boundaries of the subject lots and adjacent lots.	☒	❒
8.2.A(7) - The new surveyed property line(s) as a result of the application, including bearings and distances, as determined by an actual field survey by a licensed land surveyor, including the date of the completion of the survey. All dimensions shall be shown in feet and decimals, and the area of the altered lots shall be shown in square feet and acres.	☒	❒

Plan Requirements (*cont.*)	**Info. Provided**	**Waiver Sought**
8.2.A(8) - The plat shall be titled to include the names of the owners of all lots altered by the application.	☒	☐
8.2.A(9) - A statement shall be placed on the plat as follows: "This plan shows Minor Lot Line Adjustments / Boundary Line Agreements and does not require the approval of the Lebanon Planning Board as a subdivision."	☒	☐

NOTE: THE APPLICANT IS RESPONSIBLE FOR PROVIDING THE REQUIRED INFORMATION PURSUANT TO SECTION 8 OF THE SUBDIVISION REGULATIONS. PLEASE BE AWARE THAT THIS CHECKLIST IS FOR INFORMATION AND GUIDANCE ONLY AND DOES NOT REPRESENT THE LAW DICTATING SUBMITTAL REQUIREMENTS NOR IS IT COMPLETE AND INCLUSIVE THEREOF.

Completed By: _____ 19 Sep 22
Daniel A. Nash, PE

Planning office Use Only:

Date Received___/___/___ Checklist Complete YES or NO Checked by:_____

(Last Revised 05/22/13)

FOR REGISTRY USE

THE SUBDIVISION REGULATIONS OF THE CITY OF LEBANON AND THE NOTICE OF ACTION ARE A PART OF THE PLAT, AND THE APPROVAL OF THIS PLAT REQUIRES THE COMPLETION OF ALL THE REQUIREMENTS OF THE NOTICE OF ACTION AND SAID SUBDIVISION REGULATIONS EXCEPTING ONLY ANY MODIFICATION OR WAIVER SET FORTH IN THE NOTICE OF ACTION.

THIS PLAN SHOWS MINOR LOT LINE ADJUSTMENTS/BOUNDARY LINE AGREEMENTS AND DOES NOT REQUIRE THE APPROVAL OF THE LEBANON PLANNING BOARD AS A SUBDIVISION.

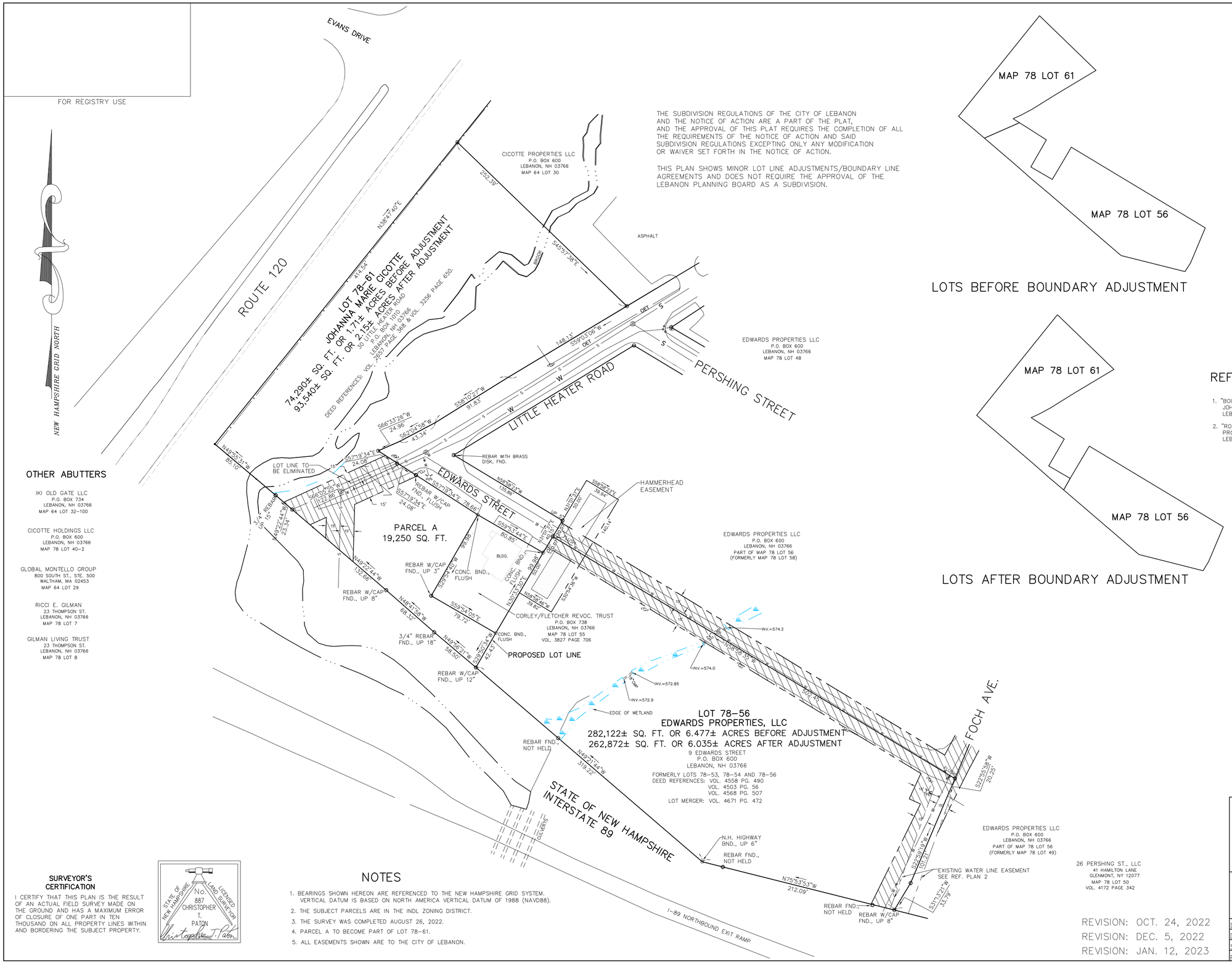

LOTS BEFORE BOUNDARY ADJUSTMENT

LOTS AFTER BOUNDARY ADJUSTMENT

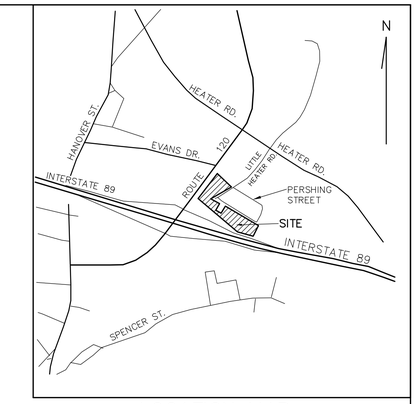

LOCATION MAP

REFERENCE PLANS

1. "BOUNDARY LINE ADJUSTMENT PLAN PREPARED FOR CICOTTE PROPERTIES, LLC & JOHANNA MARIE CICOTTE, LITTLE HEATER ROAD, HEATER ROAD & ROUTE 120, LEBANON, NH"; DATED 11/23/2021; PREPARED BY THIS OFFICE.
2. "ROAD DISCONTINUANCE AND EASEMENT PLAN, CITY OF LEBANON AND EDWARDS PROPERTIES, LLC, LITTLE HEATER ROAD, EDWARDS ST., FOCH AVE. AND PERSHING ST., LEBANON, NH"; DATED 03/21/2022; PREPARED BY THIS OFFICE.

OTHER ABUTTERS

IKI OLD GATE LLC
P.O. BOX 734
LEBANON, NH 03766
MAP 64 LOT 32-100

CICOTTE HOLDINGS LLC
P.O. BOX 600
LEBANON, NH 03766
MAP 78 LOT 40-2

GLOBAL MONTELLO GROUP
800 SOUTH ST., STE. 500
WALTHAM, MA 02453
MAP 64 LOT 29

RICCI E. GILMAN
23 THOMPSON ST.
LEBANON, NH 03766
MAP 78 LOT 7

GILMAN LIVING TRUST
23 THOMPSON ST.
LEBANON, NH 03766
MAP 78 LOT 8

LEGEND

- CONCRETE BOUND FOUND
- IRON PIPE OR PIN FOUND
- BOUNDARY CORNER – UNMARKED
- UTILITY POLE
- OE — OVERHEAD ELECTRIC
- SEWER MANHOLE
- S — SEWER LINE
- HYDRANT
- WATER GATE VALVE
- W — WATER LINE
- WATER LINE OR UTILITY EASEMENT
- HAMMERHEAD EASEMENT

GRAPHIC SCALE

50 0 25 50 100 200

(IN FEET)
1 inch = 50 ft.

SURVEYOR'S CERTIFICATION

I CERTIFY THAT THIS PLAN IS THE RESULT OF AN ACTUAL FIELD SURVEY MADE ON THE GROUND AND HAS A MAXIMUM ERROR OF CLOSURE OF ONE PART IN TEN THOUSAND ON ALL PROPERTY LINES WITHIN AND BORDERING THE SUBJECT PROPERTY.

STATE OF NEW HAMPSHIRE — No. 887 — CHRISTOPHER T. PATON — LICENSED LAND SURVEYOR

SIGNATURE

NOTES

1. BEARINGS SHOWN HEREON ARE REFERENCED TO THE NEW HAMPSHIRE GRID SYSTEM. VERTICAL DATUM IS BASED ON NORTH AMERICA VERTICAL DATUM OF 1988 (NAVD88).
2. THE SUBJECT PARCELS ARE IN THE INDL ZONING DISTRICT.
3. THE SURVEY WAS COMPLETED AUGUST 26, 2022.
4. PARCEL A TO BECOME PART OF LOT 78-61.
5. ALL EASEMENTS SHOWN ARE TO THE CITY OF LEBANON.

REVISION: OCT. 24, 2022
REVISION: DEC. 5, 2022
REVISION: JAN. 12, 2023

BOUNDARY LINE ADJUSTMENT PLAN

JOHANNA MARIE CICOTTE AND EDWARDS PROPERTIES, LLC

LITTLE HEATER ROAD, EDWARDS ST. & ROUTE 120
GRAFTON COUNTY, LEBANON, NEW HAMPSHIRE

PREPARED BY

PATON LAND SURVEYING, LLC

150 SOUTHRIDGE ST., SPRINGFIELD, VT 05156

DATED: AUGUST 30, 2022	SCALE: 1"=50'
DRAWN BY: CP	CK'D BY CTP
SURVEYED BY: TR, CTP, JM	
PROJ. NO. 2021-282-60A	

CITY OF LEBANON ~ PLANNING & DEVELOPMENT

PLANNING BOARD

October 9, 2023 Meeting

Staff Memorandum – PB2023-34-SPA

APPLICATION INFORMATION

Agenda Item: 3.C

Application ID: PB2023-34-SPA

Application Type:
Amendment to Site Plan approval of a 204-unit multi-family residential development

Property Location & Tax Map:
402 Mount Support Road (Tax Map 24, Lot 9) and 392 Mount Support Road (Tax Map 24, Lot 10)

Applicant & Property Owner:
SPNH Lebanon North, LLC

Property Size *(per City Assessor's records)*:
+/-14.21 acres (consisting of +/-6.55 acres for 402 MS Rd, and +/-7.66 acres for 392 MS Rd)

Existing Use & Improvements:

- 402 MS Rd: +/-3,552 (gross) sq. ft. one-family dwelling, constructed in 1986 (a conforming use in the R-1 District per §308.2), and accessory structures
- 392 MS Rd: vacant

Proposed Use:
204-unit multi-family development consisting of three (3) buildings

Zoning District: Residential One (R-1)

Overlay Districts:
Wetlands Conservation District

Future Land Use Map:
Residential – High and Rural

Staff Exhibits:

- Notice of Action for PB2021-33-SPR
- Notice of Action for PB2023-27-SPA
- 10/3/23 memo from Duane Egner

LEGAL NOTICE

SPNH Lebanon North, LLC, 402 & 392 Mount Support Road (Tax Map 24, Lots 9 & 10), zoned R-1: Pursuant to Section 9.1 of the Site Plan Review Regulations, a request for a modification to a previously approved Site Plan (PB2021-33-SPR) for a 204-unit multi-family development. Applicant proposes to construct 3, 4-story multi-family dwellings and a community amenity building in place of the 4, 3-story multi-family dwellings currently approved, together with related modifications to parking, utilities, landscaping, access, and other site improvements. PB2023-34-SPA

PLANS AND APPLICATION MATERIALS

- Application form
- Letter dated September 11, 2023, from Nicholas A. Fiore, PE, of Engineering Ventures, PC (project description; 6 pages)
- Application for Waivers (4 pages)
- Site Plan Review Regulations Technical Checklist (10 pages)
- Plan set titled "Marek 2 Site Development Plans" prepared by Engineering Ventures, PC, dated September 11, 2023, EV Project #22715 (46 Sheets)
- Plan set titled, "Development Comparison Exhibits," prepared by Engineering Ventures, PC, dated September 11, 2023, EV Project #22715 (3 sheets)

COMPLETENESS REVIEW

This application has been reviewed in accordance with the Lebanon Site Plan Review Regulations. The Planning and Development Department recommends that the Board find that the application is complete enough to accept jurisdiction and to commence review.

APPLICATION OVERVIEW

402 Mount Support Road is a +/-6.3 acre lot currently improved with a one-family dwelling. 392 Mount Support Road is +/-7.9 acres in size and is currently vacant. Collectively, the subject properties will be referred to herein as "the property". On February 14, 2022, the Board approved the site plan application of Mount Support Development, LLC, to redevelop the property as a 204-unit multi-family dwelling complex consisting of four buildings to be constructed in phases (PB2021-33-SPR).

On August 14, 2023, the Planning Board approved Mount Support Development, LLC's application to amend the phasing plan. Subsequently, the property was sold to SPNH Lebanon North, LLC, an entity controlled by the developer of the Marek development under construction at 343 Mount Support Road. SPNH Lebanon North (the Developer) now proposes several amendments to the approved site plan, as described in detail in the attached letter from dated September 11, 2023, from Nicholas A. Fiore, PE, of Engineering Ventures, PC.

Most significantly, instead of 4, 3-story multi-family dwellings for the 204 proposed dwelling units, the applicant now proposes to construct 3, 4-story multi-family dwellings and a community amenity building. A revised phasing plan is proposed on Sheet 4 (C0.3) of the plan set. As noted in the September 11th letter from Mr. Fiore, the changes also include the following:

- Opening up space adjacent to the wildlife corridor south of the project site.
- Reducing the number of parking spaces from 390 to 314.
- Reducing the total impervious coverage by 15,625 sq. ft.
- Amending the location of stormwater conveyance infrastructure (catch basins, inlets, piping, etc)
- Adjustments to utility alignments and service connection locations.
- Landscaping and lighting adjustments.

The attached development comparison exhibit plan set (3 sheets) is intended to highlight the reduced impacts of the applicant's amended site plan proposal.

Figure 1. Bird's Eye View of Subject Properties (looking east).

Image ©2021 Eagleview (image taken 4/4/2021)

STAFF COMMENTS

PLANNING

Waiver Requests

Pursuant to Section 7.1 ("Waiver of Regulations"), the applicant has requested waivers from certain provisions of Article VI ("Design and Construction Requirements") of the Site Plan Review Regulations as set forth in the attached Application for Waivers. All but one of these of these waivers was approved as part of the original application and do not need to be approved again unless the Board determines that the scope of the changes are significant enough to warrant a reconsideration of the waiver approvals. Otherwise, the only new waiver request is from Section 6.5.C.3, relative to the rear building which is approximately 410 ft. in length. Section 6.5.C.3 provides that no structure may be longer than 350 feet, "unless a pedestrian passage is provide at midway (or similar) along the structure length". However, it appears that the rear building satisfies the pedestrian passage requirement and, therefore, a waiver is not required:

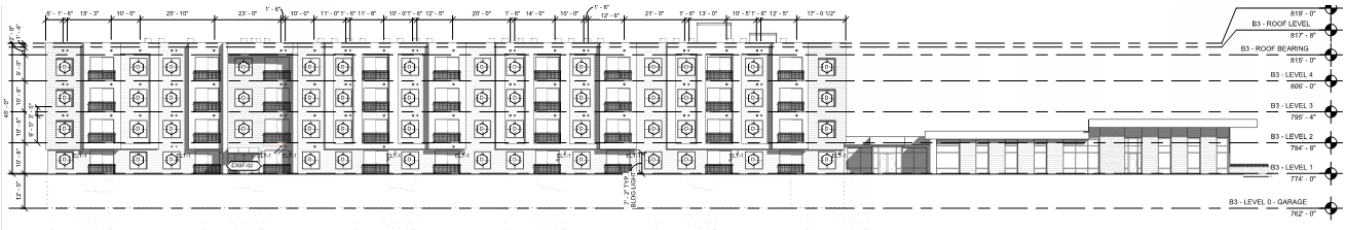

CITY ASSESSOR
No comment at this time.

BUILDING INSPECTOR
No comment at this time.

ENGINEERING/PUBLIC WORKS
No comment at this time.

FIRE DEPARTMENT
See comments from the Fire Department set forth in the attached meme from Duane Egner, dated October 3, 2023.

POLICE DEPARTMENT
No comment at this time.

STAFF RECOMMENDATIONS

If the Planning Board moves to approve this request, then based on the information reviewed by City staff, the Planning and Development Department recommends that the Planning Board approve the application with the conditions noted below:

1. The applicant shall satisfy and comply with the Planning Board Notice of Action for PB2021-33-SPR, dated February 14, 2022, and all conditions of approval thereof except as provided in

Condition of Approval #2 below. This approval shall supersede the Planning Board's Notice of Action dated August 14, 2023, for PB2023-27-SPA.

2. Condition #17 set forth in the Planning Board Notice of Action for PB2021-33-SPR, dated February 14, 2022, is hereby stricken and replaced with the following:
   Pursuant to Section 4.9 of the Site Plan Review Regulations, the project may be constructed in phases per the phasing plan submitted for PB2023-34-SPA and per the conditions of approval set forth in the Planning Board Notice of Action for PB2021-33-SPR, dated February 14, 2022, and in the Planning Board Notice of Action for PB2023-34-SPA, dated October 9, 2023.

3. Prior to any construction activities and prior to the application for a Building Permit, the applicant shall make the following revisions to the plan set to the satisfaction of the Planning and Development Department and the City Engineer:
   a. Identify the on-site water main easement area to be conveyed to the City;
   b. Add sheet numbers to each sheet (Sheets 1 – 46);
   c. Revise the plan date to November 21, 2021, to match the original approved plan, and provide all subsequent revision dates and descriptions thereof (5.1.E.4.d); and
   d. Incorporate all other revised plan sheets and changes submitted during the course of the hearing and update all other plan sheets as necessary to reflect the changes.

   The applicant shall provide the Planning and Development Department with one (1) full size copy of the revised plan set, and a digital copy of the revised plan set saved in a PDF-A format for archival purposes.

4. Prior to any construction activities and prior to the application for a Building Permit, the applicant shall apply to the Planning and Development Department for a voluntary merger of 402 & 392 Mount Support Road (Tax Map 24, Lots 9 & 10). Upon approval, the voluntary merger shall be recorded at the Grafton County Registry of Deeds.

5. Prior to issuance of a Building Permit, the applicant shall request approval pursuant to City Code Chapter 182, Section 182-40.B, to extend the water main from Mount Support Road through the development.

Attachments

cc: Donald Smith, SPNH Lebanon North, LLC (via e-mail)
Nicholas A. Fiore, PE, of Engineering Ventures, PC (via e-mail)
File

DocuSign Envelope ID: 83890BFE-5196-40A9-BABF-5E81CE7608AE

CITY OF LEBANON ~ PLANNING & DEVELOPMENT

NOTICE OF ACTION
LEBANON PLANNING BOARD
PB2021-33-SPR

Notice is hereby given that on **December 13, 2021**, the following action was taken by a majority of the Lebanon Planning Board in accordance with the City of Lebanon Site Plan Review Regulations:

Jeremy Rutter moved that the application of Mount Support Development, LLC (applicant) and Sylvia D. Lahaye Revocable Trust & Pat Lumber Jack, Inc. (property owners), 402 & 392 Mount Support Road (Tax Map 24, Lots 9 & 10), zoned R-1 is complete enough for the Planning Board to accept jurisdiction and commence review.

The motion was seconded by Kim Chewning. The vote on the motion was approved, 7-0.

Notice is hereby given that on February 14, 2022, the following action was taken by a majority of the Lebanon Planning Board in accordance with the City of Lebanon Site Plan Review Regulations:

Matthew Hall moved that for the application of Mount Support Development, LLC (applicant) and Sylvia D. Lahaye Revocable Trust & Pat Lumber Jack, Inc. (property owners), PB2021-33-SPR, the Lebanon Planning Board APPROVE partial waivers from the following sections of the Site Plan Review Regulations:

- Section 6.2.D – Requiring landscaping around buildings.
- Section 5.1.E.16 – "Existing trees over 12 inches in diameter, measured 4.5 feet above the ground surface, and within 25 feet of the disturbed area, must be counted and shown on the plan, if included towards fulfilling the landscaping requirements."
- Section 6.5.C.2 – "At least one primary entrance to the building shall face the public way on which the lot has frontage."
- Section 6.5.C.3 – "Pedestrian entrances shall be provided at least every 60 linear feet along the ground floor of the primary façade."
- Section 6.2.L – Requiring landscape areas to be protected by curbing, wheel stops, or fencing.
- Section 6.2.B.1 – Perimeter landscaping requirements.

The motion was seconded by Laurel Stavis. The vote on the motion was approved, 9-0.

Notice is hereby given that on **February 14, 2022**, the following action was taken by a majority of the Lebanon Planning Board in accordance with the City of Lebanon Site Plan Review Regulations:

Matthew Hall moved that the Lebanon Planning Board APPROVE the application of Mount Support Development, LLC (applicant) and Sylvia D. Lahaye Revocable Trust & Pat Lumber Jack, Inc. (property owners) for Site Plan Review to construct a proposed 4-building multi-family development consisting of 204 dwelling units, together with parking, utilities, landscaping, access, and other related

DocuSign Envelope ID: 83890BFE-5196-40A9-BABF-5E81CE7608AE

site improvements at 402 & 392 Mount Support Road (Tax Map 24, Lots 9 & 10), zoned R-1, PB2021-33-SPR, as shown on a plan set titled "402 Mr. Support Road – Residential Development Site Plan Review" prepared by Engineering Ventures, PC, dated November 8, 2021, last revised January 24, 2022, EV Project #19324 (34 Sheets), including any and all submissions and testimony provided for and during the public hearing, subject to the following conditions:

Conditions to be Satisfied Prior to Application for a Building Permit

1. The applicant shall address the comments in the letter dated February 2, 2022, from Steve Keach, PE, of Keach-Nordstrom Associates, Inc., to the satisfaction of the City Engineer.

2. Prior to the start of any construction activities on the property for which inspection is required pursuant to this decision or any applicable ordinance or code, the applicant shall make the following revisions to the plan set to the satisfaction of the Planning and Development Department and the City Engineer:
   a) Any changes made pursuant to Condition of Approval #1.
   b) Incorporate all other revised plan sheets and changes submitted during the course of the hearing and update all other plan sheets as necessary to reflect the changes.

   The applicant shall provide the Planning and Development Department with one (1) full size copy of the revised plan set, and a digital copy of the revised plan set saved in a PDF-A format for archival purposes.
3. The applicant shall schedule and hold a pre-building permit application meeting with the Planning and Development Department, City Building Inspectors, City Engineer/Department of Public Works, and Fire Department, in order to help streamline the building permit review process and to review applicable code requirements.

4. The applicant shall obtain approval from the City Council or the City Manager's office for any additional water and/or sewer flows in accordance with the applicable sections of Chapter 136 and 182 of the City Code.

5. All engineering review fees shall be paid in full as required by Section 4.7.E.1 of the Site Plan Review Regulations.

Conditions to be Satisfied Prior to the Issuance of a Building Permit

6. A water flow test shall be completed on Mount Support Road to be witnessed and approved by the Lebanon Fire Department.

7. The development shall be subject to City of Lebanon Impact Fees, pursuant to Section 213 of the Zoning Ordinance. The Impact Fee shall be calculated at the time of Building Permit issuance based on the Impact Fee Schedule adopted on October 12, 2021. In accordance with RSA 674:39, the approved site plan shall be exempt from any future changes in impact fees and methodology for five years from the date of approval; however, any building permits which are issued after the end of that five-year period shall be fully subject to whatever impact fees and methodology are in effect at the time of building permit issuance.

8. Prior to the start of any construction activities on the property for which construction inspection is required pursuant to this decision or any applicable ordinance or code, the City shall retain the services of an independent third-party inspector, for which the applicant shall be responsible for all inspection fees related to (a) on-site work related to sewer, water, temporary sedimentation and erosion control, and drainage improvements, and (b) all off-site work within the City's right-of-way (including but not limited to water, sewer, roadway, sidewalks, crosswalks, bus stops/shelters, driveways, drainage), in accordance with Chapters 136 and 182 of the City Code and Section 8.2

DocuSign Envelope ID: 83890BFE-5196-40A9-BABF-5E81CE7608AE

of the Site Plan Review Regulations. The applicant shall provide funding for inspection services in a form and amount acceptable to the City and shall sign a Water & Sewer Extension and Infrastructure Inspection Agreement in accordance with Chapters 136 and 182 of the City Code.

9. Prior to the start of any construction activities on the property for which inspection is required pursuant to this decision or any applicable ordinance or code, the applicant shall obtain or update (if appropriate) any required State approvals including, but not limited to, the following:
    a) NHDES Wetland Impact Permit, if necessary
    b) Alteration of Terrain Permit, if necessary
    c) NHDES Sewer Connection Permit, if necessary

10. In coordination with Advance Transit, the Planning and Development Department, and the Department of Public Works, the applicant shall prepare a final design of the proposed bus stop improvements depicted on the approved plan set.

11. All water and sewer fees shall be paid as set forth in City Code Chapter 68.

Conditions to be Satisfied Prior to the Issuance of a Certificate of Occupancy

12. The applicant shall dedicate the completed water mains and hydrants within the complex, excluding service connections beyond the curb shut-off valves, to the City for ownership and maintenance, subject to appropriate easements. Said conveyance and easements shall be approved by the City Attorney and the Department of Public Works and recorded in the Grafton County Registry of Deeds prior to the issuance of a final Certificate of Occupancy for the project and prior to the acceptance of the utility improvements.

13. The applicant shall prepare and record an open space covenant or deed restriction for the 7.9-acre area (the undeveloped areas of Tax Map 24, Lots 9 and 10) as depicted on the plat titled Conservation Area Exhibit, prepared by Engineering Ventures, PC, submitted at the February 14, 2022 public hearing. The open space covenant or restriction shall be in a form and content acceptable to the Planning and Development Department and the City Attorney.

14. Third-party engineer or design engineer inspection reports and as-built drawings provided by the applicant (PDF format and CAD .dwg format, using the NH State Plane Coordinate System), including tie sheets, shall be reviewed and approved by the City Engineer prior to acceptance of any utility improvements by the City.

15. The impact fee calculated pursuant to Condition of Approval #7 shall be paid.

16. All improvements both on-site and off-site shall be completed and shall be constructed as depicted on the approved plan, including any modifications to the plan as may be approved by the Planning Board in accordance with the Site Plan Review Regulations.

General Conditions

17. Pursuant to Section 4.9 of the Site Plan Review Regulation, the project may be constructed in phases per the phasing plan, attached hereto as Exhibit A, subject to the following:
    a) With respect to the Phase 1 site improvements, the applicant shall be required to (a) achieve Active and Substantial Development or Building, as defined in Section 8.4.A of the Site Plan Review Regulations, by August 31, 2023; and (b) achieve Substantial Completion, as defined in Section 8.4.B, by August 31, 2024.

DocuSign Envelope ID: 83890BFE-5196-40A9-BABF-5E81CE7608AE

b) With respect to the remaining site improvements, the applicant shall be required to achieve Substantial Completion by August 31, 2025.

18. All construction traffic shall travel to and from NH Route 120 through the Lahaye Drive/Mt. Support Road intersection. Construction traffic is prohibited from traveling on Mount Support Road at any point south of the subject property.

19. Edge-of-disturbance fencing shall be installed and maintained before and during any site work, to be verified by the City Engineer or City's third-party inspector on site.

20. All required landscape plantings shall meet the minimum size requirements for such plantings set forth in Section 6.2.B of the Site Plan Review Regulations at the time of installation. The evergreen landscape plantings proposed south of the southerly driveway on Sheet C2.8 shall be installed and planted in such a manner as to effectively screen the proposed improvements from the southerly driveway northward from the wildlife corridor documented in the report titled "Lebanon's Wildlife Corridors" prepared by Dr. Rick Van de Poll, Ph.D., dated November 2016. Regardless of the number of plants depicted on Sheet C2.8, the applicant shall be required to install as many plantings as necessary to achieve a visual buffer within five (5) years from the time of installation to the satisfaction of the Planning & Development Department.

21. The applicant shall obtain an Excavation Permit from the Department of Public Works for any site work in the public right-of-way prior to any work in the right-of-way, and construction or installation of any new driveway(s) shall also require a Driveway Permit from the Department of Public Works.

22. The property owner is responsible for the maintenance and operation of the stormwater management system in accordance with the O&M plan, and such responsibility shall run with the land. (Section 6.6.H.2.b of the Site Plan Review Regulations).

The motion was seconded by Jeremy Rutter. The vote on the motion was unanimous in favor, 9-0.

THE CITY OF LEBANON

By: _____ DATE: 3/28/2022
Planning Board Chair

DocuSigned by:
Sylvia Lahaye Trust
AC5B50C79C28425...
3/29/2022

DocuSigned by:
James Fredyma
A9B352748DAA456...
3/29/2022

DocuSigned by:
Ken Braverman, Mt Supp
051C0F956368474...
3/31/2022

CITY OF LEBANON ~ PLANNING & DEVELOPMENT

NOTICE OF ACTION
LEBANON PLANNING BOARD
PB2023-27-SPA

Notice is hereby given that on **August 14, 2023**, the following action was taken by a majority of the Lebanon Planning Board in accordance with the City of Lebanon Site Plan Review Regulations:

"Jeremy Rutter moved that the application of Mount Support Development, LLC (applicant/property owner) and Pat Lumber Jack, Inc. (property owner), 402 & 392 Mount Support Road (Tax Map 24, Lots 9 & 10), zoned R-1, is complete enough for the Planning Board to accept jurisdiction and commence review."

The motion was seconded by Andrew Faunce. The vote on the motion was approved, 7-0.

Notice is hereby given that on **August 14, 2023**, the following action was taken by a majority of the Lebanon Planning Board in accordance with the City of Lebanon Site Plan Review Regulations:

"Jeremy Rutter moved that the Lebanon Planning Board **APPROVE** the application of Mount Support Development, LLC (applicant) and at Lumber Jack, Inc. (property owner) to amend the phasing schedule for a 4-building, 204-unit multi-family development originally approved on February 14, 2022 (PB2021-33-SPR) at 402 & 392 Mount Support Road (Tax Map 24, Lots 9 & 10), zoned R-1, PB2023-27-SPA, per application materials submitted and including any and all submissions and testimony provided for and during the public hearing, subject to the following conditions:

1) The applicant shall satisfy and comply with the Planning Board Notice of Action for PB2021-33-SPR, dated February 14, 2022, and all conditions of approval thereof except as provided in Conditions of Approval #2 and #3 below.

2) The applicant shall make the following changes to the revised phasing plan:
   a) Regarding Phase 1:
      i) remove the word "commence" from the "active and substantial development" label; and
      ii) include construction of northbound bus stop on Mount Support Rd; and
   b) Remove active and substantial development dates from Phases 2, 3, and 4.

3) Condition #17 set forth in the Planning Board Notice of Action for PB2021-33-SPR, dated February 14, 2022, is hereby stricken and replaced with the following:

Pursuant to Section 4.9 of the Site Plan Review Regulations, the project may be constructed in phases per the phasing plan submitted for PB2023-27-SPA, as revised per Condition of Approval #2 above and per the conditions of approval set forth in the Planning Board Notice of Action for PB2021-33-SPR, dated February 14, 2022."

The motion was seconded by Bruce Garland. The vote on the motion was approved,7-0

LEBANON FIRE DEPARTMENT
12 South Park Street
Lebanon, NH 03766

Phone: 603-448-8810
FAX: 603-448-8811
Chris Christopoulos, Jr.
Fire Chief

October 2, 2023

To: Tim Corwin, Senior Planner and Zoning Administrator
Lebanon Planning Board Members

From: Duane Egner, Fire Inspector

Re: October Planning Board Applications Review

Tim,

The Lebanon Fire Department has reviewed the following Lebanon Planning Board applications to determine compliance with the various applicable fire codes adopted by the State of New Hampshire and City of Lebanon. Below are the results of the review.

1. Vincent & Tarah Cantore, 121 Slayton Hill Road (Tax Map 134, Lot 10), zoned RL-2: Request for approval of a proposed three (3)-lot Minor Subdivision. PB2023-13-MIN
   a. The Lebanon Fire Department has reviewed this application and has no fire code related concerns.

2. SPNH Lebanon North, LLC, 402 & 392 Mount Support Road (Tax Map 24, Lots 9 & 10), zoned R-1: Pursuant to Section 9.1 of the Site Plan Review Regulations, a request for a modification to a previously approved Site Plan (PB2021-33-SPR) for a 204-unit multi-family development. Applicant proposes to construct 3, 4-story multi-family dwellings and a community amenity building in place of the 4, 3-story multi-family dwellings currently approved, together with related modifications to parking, utilities, landscaping, access, and other site improvements. PB2023-34-SPR
   a. It appears that there will be low shrubs or bushes planted in the areas of the buildings where the fire department connection for the automatic fire sprinkler system will be located. The Lebanon Fire Department requests that no bushes or other plantings be installed in the area of the fire department connects that may obstruct this connection point.
   b. Per the 2018 NFPA 1, Section 17.1.1: "In cases in which the local jurisdiction declares that an area within the jurisdiction is a wildland urban interface as determined by an assessment tool based upon accepted fire services practices, or where new structures will be located in a wildland/urban interface or intermix area, the AHJ shall perform, or cause to be performed, a wildland fire hazard assessment of each structure ignition zone in the development to determine relative risk, the extent of wildland fire hazard, and applicable mitigation

measures." According to US Forest Service 2010 Wildland Urban Interface Map, this property is in a wildland urban intermix area. The Lebanon Fire Department requests this information prior to any building permit being issued for the project.

3. Edwards Properties, LLC, Boundary Line Adjustment. PB2023-35-BLA
   a. The Lebanon Fire Department has reviewed this application and has no fire code related concerns.

Please let me know if there are any questions.
Sincerely,

Duane E. Egner

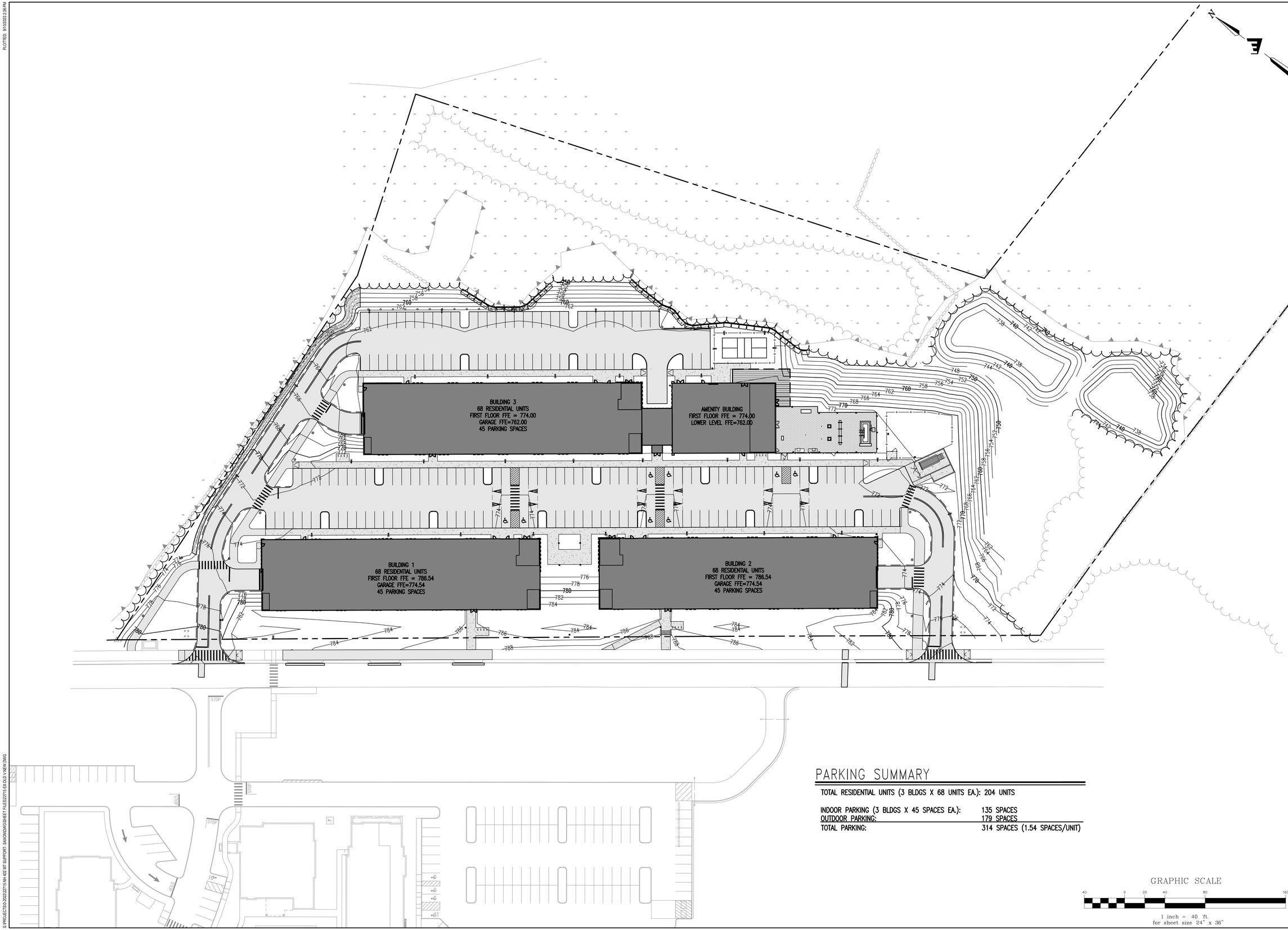

PARKING SUMMARY

TOTAL RESIDENTIAL UNITS (3 BLDGS X 68 UNITS EA.): 204 UNITS

INDOOR PARKING (3 BLDGS X 45 SPACES EA.):	135 SPACES
OUTDOOR PARKING:	179 SPACES
TOTAL PARKING:	314 SPACES (1.54 SPACES/UNIT)

GRAPHIC SCALE

40 0 20 40 80 160

1 inch = 40 ft.
for sheet size 24" x 36"

Stamp

No.	Description	Date

ENGINEERING VENTURES PC
208 Flynn Avenue, Suite 2A, Burlington, VT 05401 • 802-863-6225
85 Mechanic Street, Suite E2-3, Lebanon, NH 03766 • 603-442-9333
414 Union Street, Schenectady, NY 12305 • 518-630-9614
www.engineeringventures.com

SPNH LEBANON NORTH, LLC
c/o SAXON PARTNERS
25 RECREATION PARK DRIVE, SUITE 204
HINGHAM, MA 02043
781-875-3300

Sheet Title: CURRENT SITE PLAN OVERVIEW

Project Title: MAREK 2
392 & 402 MT SUPPORT ROAD
CITY OF LEBANON, GRAFTON COUNTY, NEW HAMPSHIRE

EV Project #	22715
Drawn By:	JWF
Checked By:	NAF
Scale:	1" = 40'
Date:	09/11/2023

EX1.1

PLOTTED: 9/15/2023 2:36 PM

S:\PROJECTS\0-2022\22715 NH 402 MT SUPPORT- SAXON\DWG\SHEET FILES\22715 EX QLD V NEW.DWG

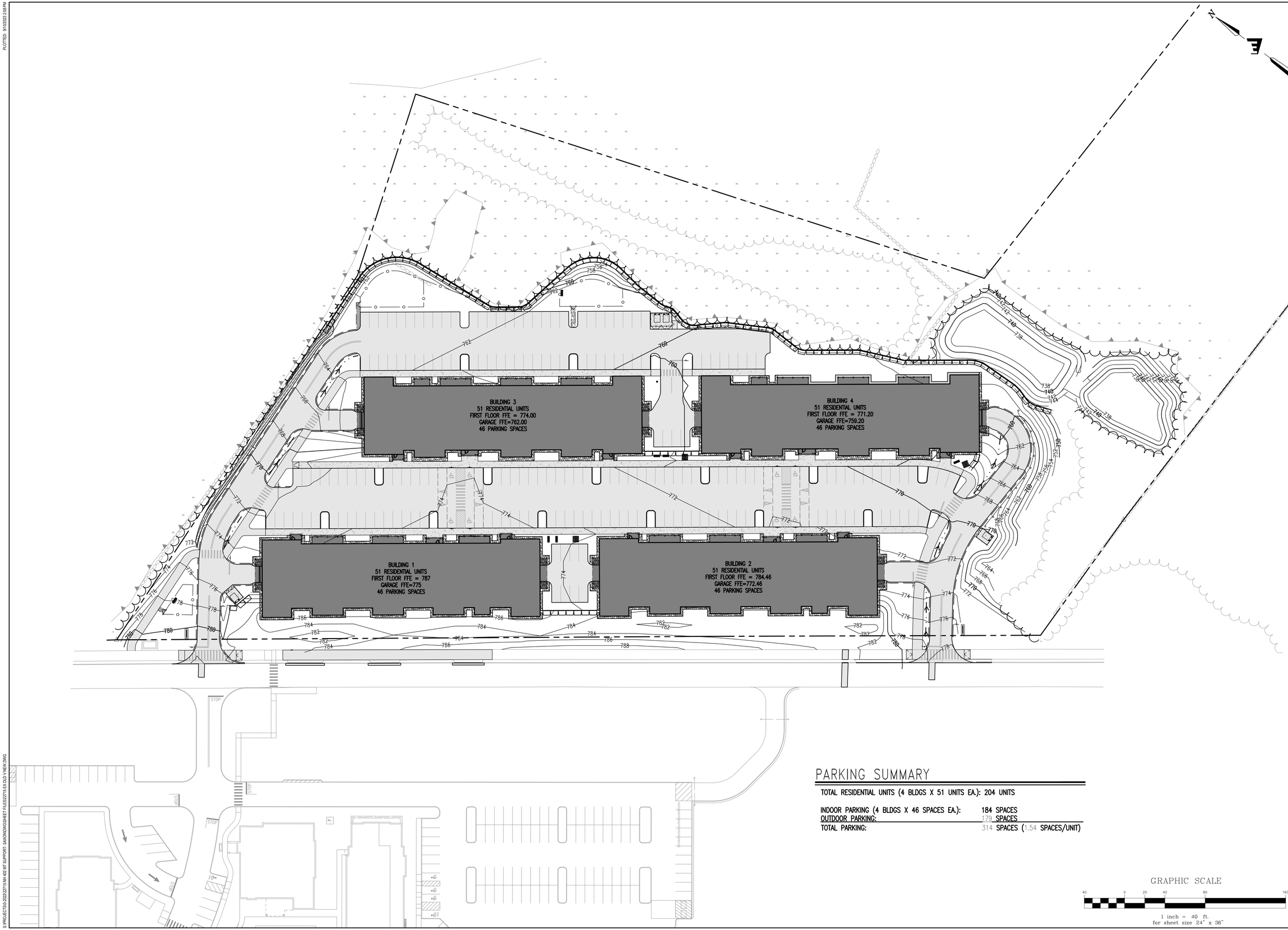

PARKING SUMMARY

TOTAL RESIDENTIAL UNITS (4 BLDGS X 51 UNITS EA.): 204 UNITS

INDOOR PARKING (4 BLDGS X 46 SPACES EA.):	184 SPACES
OUTDOOR PARKING:	179 SPACES
TOTAL PARKING:	314 SPACES (1.54 SPACES/UNIT)

No.	Description	Date

Stamp

ENGINEERING VENTURES PC
208 Flynn Avenue, Suite 2A, Burlington, VT 05401 • 802-863-6225
85 Mechanic Street, Suite E2-3, Lebanon, NH 03766 • 603-442-9333
414 Union Street, Schenectady, NY 12305 • 518-630-9614
www.engineeringventures.com

SPNH LEBANON NORTH, LLC
c/o SAXON PARTNERS
25 RECREATION PARK DRIVE, SUITE 204
HINGHAM, MA 02043
781-875-3300

Sheet Title: PAST SITE PLAN OVERVIEW

Project Title: MAREK 2
392 & 402 MT SUPPORT ROAD
CITY OF LEBANON, GRAFTON COUNTY, NEW HAMPSHIRE

EV Project #	22715
Drawn By:	JWF
Checked By:	NAF
Scale:	1" = 40'
Date:	09/11/2023

EX1.2

PLOTTED: 9/15/2023 2:58 PM

S:\PROJECTS\A-2022\22715 NH 402 MT SUPPORT - SAXON\DWG\SHEET FILES\22715 EX OLD V1 VIEW.DWG

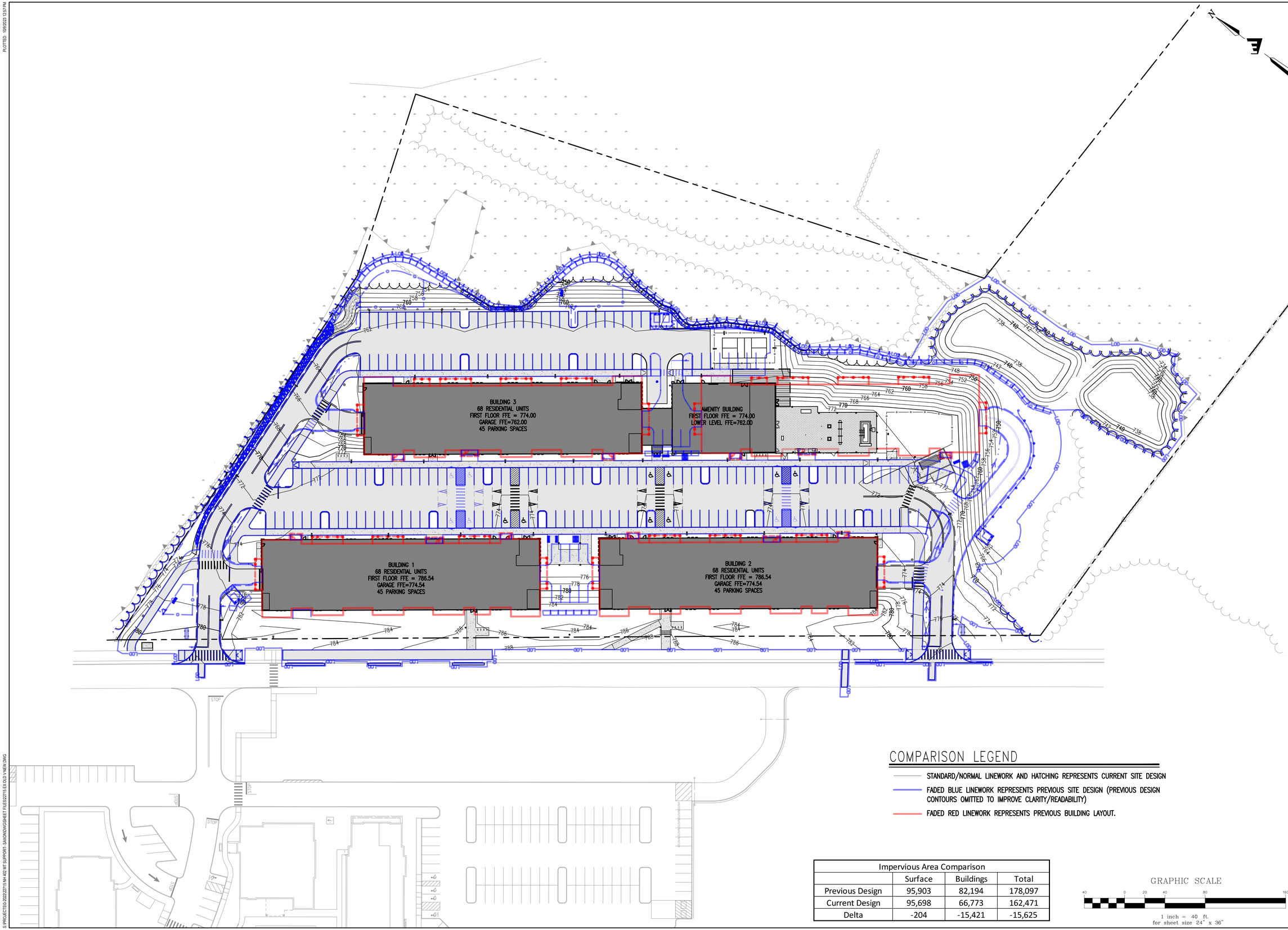

COMPARISON LEGEND

- STANDARD/NORMAL LINEWORK AND HATCHING REPRESENTS CURRENT SITE DESIGN
- FADED BLUE LINEWORK REPRESENTS PREVIOUS SITE DESIGN (PREVIOUS DESIGN CONTOURS OMITTED TO IMPROVE CLARITY/READABILITY)
- FADED RED LINEWORK REPRESENTS PREVIOUS BUILDING LAYOUT.

Impervious Area Comparison			
	Surface	Buildings	Total
Previous Design	95,903	82,194	178,097
Current Design	95,698	66,773	162,471
Delta	-204	-15,421	-15,625

GRAPHIC SCALE

40 0 20 40 80 160

1 inch = 40 ft.
for sheet size 24" x 36"

Stamp

No.	Description	Date

ENGINEERING VENTURES PC
208 Flynn Avenue, Suite 2A, Burlington, VT 05401 • 802-863-6225
85 Mechanic Street, Suite E2-3, Lebanon, NH 03766 • 603-442-9333
414 Union Street, Schenectady, NY 12305 • 518-630-9614
www.engineeringventures.com

SPNH LEBANON NORTH, LLC
c/o SAXON PARTNERS
25 RECREATION PARK DRIVE, SUITE 204
HINGHAM, MA 02043
781-875-3300

Sheet Title: SITE PLANS COMPARED

Project Title: MAREK 2
392 & 402 MT SUPPORT ROAD
CITY OF LEBANON, GRAFTON COUNTY, NEW HAMPSHIRE

EV Project #	22715
Drawn By:	JWF
Checked By:	NAF
Scale:	1" = 40'
Date:	09/11/2023

EX1.3

PLOTTED: 10/6/2023 12:57 PM

S:\PROJECTS\2022\22715 MY 402 MT SUPPORT - SAXON\DWG\SHEET FILES\22715 EX OLD V NEW.DWG

CITY OF LEBANON
APPLICATION FOR

SPECIAL EXCEPTION	☐	☒	SITE PLAN REVIEW
VARIANCE	☐	☐	SUBDIVISION
MOTION FOR REHEARING	☐	☐	LOT LINE ADJUSTMENT
APPEAL OF AN ADMIN. DECISION	☐	☐	CONDITIONAL USE PERMIT

☐ OTHER _____

PROPERTY OWNER (APPLICANT):

NAME: SPNH Lebanon North, LLC TEL.#: 781-875-3300

MAILING ADDRESS: c/o Saxon Partners, 25 Recreation Park Drive, Suite 204, Hingham, MA 02043

E-MAIL ADDRESS: dsmith@saxon-partners.com

CO-APPLICANT, AGENT, OR LESSEE:

NAME: TEL.#:

MAILING ADDRESS:

E-MAIL ADDRESS:

PROJECT LOCATION:

TAX MAP #: 24 LOT#: 9 & 10 PLOT #: ZONE: R1

STREET ADDRESS OF PROJECT: 402 & 392 Mount Support Road

IS THIS PROPERTY LOCATED IN THE: **WETLANDS** ☑ YES ☐ NO **HISTORIC DISTRICT** ☐ YES ☑ NO

FLOOD PLAIN ☐ YES ☑ NO

SCOPE OF PROJECT:

Modification of approved site plan PB2021-33-SPR. Modfication retains same number of apartments and site configuration, but replaces 4 3-story apartment buildings with 3 4-story buildings plus a community amenity building.

TYPE OF OCCUPANCY:

EXISTING ☐ VACANT ☑ ONE FAMILY ☐ TWO FAMILY ☐ MULTI-FAMILY ☐ COMMERCIAL ☐ INDUSTRIAL
PROPOSED ☐ VACANT ☐ ONE FAMILY ☐ TWO FAMILY ☑ MULTI-FAMILY ☐ COMMERCIAL ☐ INDUSTRIAL
IF USE IS **COMMERCIAL** OR **INDUSTRIAL**, PLEASE NOTE **SPECIFIC** USE:_____

SIGNATURE BLOCK:

FOR PLANNING BOARD APPLICATIONS ONLY: I, the undersigned, hereby submit this application on the date noted below with the knowledge and understanding that the Planning Board shall determine if the submitted application is complete according to its regulations at its next regularly scheduled meeting on October 9, 2023, unless I personally request, in writing, that the Board delay its determination of completeness to a later date.

PROPERTY OWNER: Donald Smith DATE: September 11, 2023

NOTE: IF, AS OWNER, YOU WISH TO DESIGNATE AN AGENT TO ACT ON YOUR BEHALF, PLEASE READ THE FOLLOWING AND SIGN BELOW: I hereby designate the person listed above as my agent for the purpose of procuring the necessary local permits for the proposed work as described herein. Representations made by my agent may be accepted as though made by me personally, and I understand that I am bound by any official decision made on the basis of such representation.

PROPERTY OWNER:_____ DATE:_____

DATE RECEIVED	FILE # (MAP/LOT)	APPLICATION #			
9/11/2023	24-9+10	PB2023-34-SPR			

ENGINEERING VENTURES PC

208 Flynn Avenue, Suite 2A, Burlington, VT 05401 · Tel: 802-863-6225
85 Mechanic Street, Suite E2-3, Lebanon, NH 03766 · Tel: 603-442-9333
414 Union Street, Schenectady, NY 12305 · Tel: 518-630-9614

September 11, 2023

City of Lebanon Planning & Development Department
Attn: Tim Corwin, Senior Planner and Zoning Administrator
51 North Park St
Lebanon, NH 03766

RE: Site Plan Review Amendment Application
Marke 2, 402 Mt Support Rd
Tax Map 24 Lots 9 & 10
PB2021-33-SPR

Dear Mr. Corwin,

On behalf of Saxon Partners (dba, SPNH North, LLC), Engineering Ventures, PC (EV) is pleased to submit the enclosed Site Plan Review Amendment application package for the Marek 2 residential development project located at 392 & 402 Mt Support Rd (Tax Map 24 Lots 9 & 10). This development was originally granted Site Plan Approval as the 402 Mount Support Road Residential Development on December 13, 2021 (file # PB2021-33-SPR). Saxon Partners now owns both lots and the development plan has been modified from the previously approved plans. The following is a summary of the project and changes.

Summary

The proposed development is located at 402 (Map 24, Lot 9) and 392 (Map 24, Lot 10) Mount Support Road, located in the City's high-density R1 Zoning District. Pending project approval, the two parcels will be merged for a combined parcel of 14.2± acres.

The project keeps the originally approved 204 residential units but constructs them in three (3) four-story buildings rather than four (4) three-story buildings. The new plan replaces the fourth building with an amenities building and outdoor amenity spaces. Each residential building will still include a parking garage under the building footprint; minimizing the need for surface parking and avoiding wetland impacts and preserving the project's compact and smart growth approach.

Site Layout

The development is designed to create a compact neighborhood setting. Two buildings will be just off the front setback line, a central dive will be behind them, and two more buildings behind that. The central drive will have on-street parking that creates a "downtown street" feel with sidewalks and street trees where residents can interact in sidewalk conversations. Adequate parking is provided for residents and visitors in surface lots and below the buildings. Recreation areas are provided in the amenities building, at the patio adjacent to the amenities building, in fenced dog park, and with a pickleball court. On-site multi-use paths make direct connections to the Mt Support Rd multi-use path which provides

access to nearby Boston Lots trails. As with the original plan, most of the land is preserved in its natural state.

Another noteworthy change to the design plan is the alignment of the southern driveway. It is now straighter and stays more northerly than previously approved plans. This change opens up additional space adjacent to wildlife corridor south of the project site.

The changes to the side plan reduce the number of parking spaces from 390 (1.91 spaces/unit) to 314 (1.54 spaces/unit) and reduces the impervious surfaces by 15,625 square feet.

Transportation

Two driveways provide access to the site from Mt Support Road. This maintains the flexible vehicular circulation and emergency vehicle access redundancy of the original plan. Sidewalks and internal mixed-use paths connect to the Mt Support Road mixed-use path providing good pedestrian access. Advance Transit's Blue Line services Mt Support Rd and new bus shelter is proposed near the north property corner of this development. Bike racks are provided at each building for short-term bike parking. Long-term bike parking is provided in seventeen 4'x10' lockers in each garage and a 1,700± square foot bike storage room in the basement of the amenities building. A Traffic Impact and Access Study by VHB was part of the original application and is still applicable to the revised site plan.

Wetlands and Wildlife

The rear portion of the parcel includes wetlands that are part of a larger wetland complex between Mt Support Road and Route 120. The Lebanon Natural Resources Inventory classifies these wetlands as Medium-Low Value. The wetlands within the project property were delineated by Audra L. Klumb, NH Certified Wetland Scientist #222 of A&D Klumb Environmental, LLC, Webster, NH, in September 2021. The project is designed to avoid impacts to these wetland areas and therefore does not require any wetland waivers for approvals from the City or State.

The Natural Resources Inventory also identifies a wildlife corridor south of the project site. As noted above the revised development plan conserves more area adjacent to this corridor than the previously approved plans. A series of development comparison exhibits is included with this application to demonstrate the reduced impacts.

Stormwater Management

The development's stormwater management system is designed in accordance with City of Lebanon and NHDES Alteration of Terrain (AoT) regulations. NHDES issued AoT permit number 2169 on June 6, 2022.

The stormwater management system for the new site plans remains largely unchanged from the approved plans. Treatment and mitigation will be accomplished through construction of a gravel wetland system. Pretreatment for the northerly end of the site will be provided by a stormwater chamber system which will filter out sediment and provide flow attenuation to the gravel wetland. Drainage from the southerly end of the site will be directed to a precast concrete sediment forebay for pretreatment prior to discharging to the gravel wetland system. The gravel wetland will then treat and

attenuate flows prior to discharging to the existing natural wetlands east of the site. Stormwater will be directed to the pretreatment systems through a series of roadside swales, grate drains, yard inlets, catch basins, and parking lot curbing. The locations of the conveyance infrastructure (catch basins, inlets, piping, etc.) is the most significant change to the stormwater systems.

As noted above, the project will reduce the impervious surfaces by 15,625 square feet compared to the approved plan. The stormwater systems maintain the sizes and capacities of the approved plans, so the system will perform better than that which was approved by NHDES.

Soil Erosion and Sedimentation Control

Standard erosion and sedimentation control measures will be implemented during construction of the project. Inlet protections will be installed at basin inlets. Silt fencing will be installed along the downhill edges of the site work and where otherwise indicated on the plans. Stone construction entrances will be implemented to prevent vehicles from transporting dirt and soil off the site. Once final grades are established, landscaping features will be installed for the project area.

This project will require that the developer and contractor are covered by an EPA Construction General Permit during construction activities. This includes developing and following a Stormwater Pollution Prevention Plan (SWPPP).

Utilities and Fire Protection

The development will be served by municipal water and sewer, Liberty Utilities for electric service, and private contractors for propane and communications. It is EV's understanding that all services have adequate capacity to meet the needs of the development. The revised development plan maintains the same approach to utilities as the approved plan with some adjustments to alignment and service connection locations.

An 8-inch water main will tee off the City's 12-inch main in Mt Support Rd, loop through the development via the two driveways and the central drive and connect again to the City's main at the other end of the site. A service to each building will be provided from within the central drive, as will services to fire hydrants within the site. All buildings will have complete sprinkler systems for fire protection.

Sewer service will be provided by gravity-flow pipes from the buildings to the newly constructed City sewer main in Mt Support Rd. One sewer main within the development will run under the center drive and each building will connect to it. The connection point to the City's main will be a manhole just south of the property's southern boundary. As-built information for the existing sewer was provided by Lebanon DPW and was used in designing this project's system.

City of Lebanon Sewer Allocation has been provided and the NH DES Sewer Connection Permit is pending.

Landscaping (by Paul Simon, Park Architecture)

The proposed plan for 402 Mt. Support Road includes a landscape concept design meeting the City of Lebanon, NH Landscape & Lighting Regulations. The choice and placement of plantings in the parking areas takes into account the special hazards of salt, vehicles, and maintenance equipment. Adjacent properties will be well screened from any glare produced from site lighting or vehicular headlights with the preservation of existing landscape screening. The proposed landscaping has also been developed for safe vehicular access as to not interfere with traffic site-lines and visibility requirements for vehicles egress onto Mount Support Road.

The site plans include a robust landscape proposal with attention to preserve much of the existing and surrounding landscape conditions. Perimeter landscape requirements are met with new trees and shrubs along both the North and the West sides of the property. A waiver is requested for both the South and East perimeter areas because a heavily forested landscape condition will continue to remain along these perimeter areas. A detailed summary of proposed trees and shrubs meeting the perimeter requirements is provided on plan L1.1. The previous approved site plan included the same request for a perimeter landscape waiver, however this amended submission provides a greater extent of additional plantings along the North side of the property and a much-greater extent of existing treed-area to remain.

Calculations for the parking areas have also been provided with an approximate total area of 70,400sf of impervious as outlined on plan L1.1. Minimum shading requirements have been calculated and the number of trees required to meet the 30% shading requirement are provided on plan L1.1.

As previously requested in the prior application, a waiver is requested for the requirement from the 10ft landscape buffer around buildings. The site plans include a tight layout of parking areas, buildings, and walkways parallel to the West side of the site and along the ROW of Mount Support Road. The purpose and rational for a tight layout will enable greater protection of the wetlands and the natural resource areas East of the proposed development. As stated, this is the same request as was approved with the original/prior site plan, however a much-greater extent of existing landscape and forested area will continue to remain as demonstrated with the revised site plan. It should be noted that landscaping is proposed around all building footprints as shown in detail on plans L2.0 and L2.1 regardless of not meeting a 10ft minimum buffer area.

The project includes a variety of site lighting fixtures including bollards, light poles, sport lighting poles, wall sconces, and pedestrian walkway post lighting. All proposed lighting is designed to be properly located, mounted, aimed, and shielded so as to minimize glare perceptible to drivers, pedestrians, bicyclists, and others per the city regulations. Fixtures have also been located, aimed and shielded so as to not cause light trespass upon adjacent properties or onto streets or rights-of way. The light intensity at adjoining streets does not exceed 0.5 foot-candles at grade level and the intensity at adjoining property boundaries does not exceed 0.1 foot-candles at grade level. The site lighting proposed includes LED fixtures with dimming capabilities to reduce overall energy consumption. See plan L5.2 for proposed lighting and photometrics for bollards, light posts, sport poles and pedestrian post lighting. It

should be noted that the low-level sconce lighting, sign lighting, seasonal lighting, and crosswalk lighting is not included in the photometric plan.

The project also includes many provisions for the safety and convenience of pedestrians, bicyclists, and handicapped persons. There is a multi-use path proposed along the entry drive, numerous walkways, passive and active park amenities including an amenity plaza and dog run area. In addition, each building will have a series of dedicated bicycle racks as shown on plans L2.0 and L2.1. With 204 residential units proposed, a minimum of 31 outdoor bicycle parking spaces are required. This proposal includes 32 bicycle parking spaces with 8 spaces proposed at each of the 4 buildings.

Careful attention has been provided in collaboration with the civil engineer and architect for the proposed site grading. This includes accessible routes to and from buildings to be designed at 5% maximum slopes. This will allow ease of ADA access directly from the proposed buildings to the site amenities, the dog run, the spa area, adjacent walkways and parking areas.

Overall, the goal is to provide a welcoming and colorful landscape pallet that is inviting, yet will be low-maintenance once the plantings establish. To that end, we have included a diversity of trees and shrubs that include native species and varieties that can easily survive once established. The plans also require the contractor to provide a 2-year replacement guarantee on all tree and shrub plantings. We believe the plans as proposed work well to meet all applicable city standards and will provide a beneficial landscape to the R-1 Residential 1 District.

Snow Removal

Snow storage will generally occur along the sides of the driveways and in pockets around the site as indicated on the landscaping plans. The compact design of the site will necessitate the hauling of snow off site periodically.

Construction Schedule

Pending permit approvals, it is anticipated that construction will begin in Fall 2023 and be competed by Fall 2025. A detailed phasing plan is included in the Site Development Plans.

Thank you for your time and consideration with this project. We look forward to reviewing this project with you and the City staff. In the meantime, please do not hesitate to call or email if you have any questions or need additional information.

Sincerely,
ENGINEERING VENTURES, PC

Nicholas A. Fiore, PE
Project Manager/Principal
Direct: (603) 727-7029

Enc: Application Form
Certified Notification List
Application for Waivers
Technical Checklist
Development Comparison Exhibits
Site Development Plans: 2 full-size copies and 10 half-size copies.

City of Lebanon, New Hampshire
APPLICATION FOR WAIVERS

Office Use Only	Date Received: _____	File No.: _____

PROJECT INFORMATION

Name of Applicant: SPNH Lebanon North, LLC c/o Saxon Partners

Project Name: 402 Mount Support

Project Address: 402 & 392 Mount Support Road

WAIVER REGULATIONS

In order to grant a Waiver from a requirement of the City of Lebanon Site Plan Review or Subdivision Regulations, the Planning Board must find that the Waiver is justified under one of the following criteria (*See Article VII of the Site Plan Review Regulations and Section 7.15 of the Subdivision Regulations*):

Criteria A. Strict conformity would pose an unnecessary hardship to the Applicant and waiver would not be contrary to the spirit and intent of the regulations;

OR

Criteria B. Specific circumstances relative to the site plan, or conditions of the land in such site plan, indicate that the waiver will properly carry out the spirit and intent of the regulations.

WAIVER REQUEST(S)

I (we) hereby request a Waiver from:

[You can respond in the space provided, or attach a separate statement. Please be prepared to address each request during your public hearing. You must show that you have justified granting the Waiver(s).]

1. Section 6.2.D of the (*circle one*) Site Plan Review / Subdivision Regulations. A Waiver of this Section meets (*circle one*) Criteria A / Criteria B because _____
   Same request as was approved for original site plan.
   Requirement for 10' landscaping buffer around buildings.
   Please see attached supporting statements.

2. Section 5.1.E(16) of the (*circle one*) Site Plan Review / Subdivision Regulations. A Waiver of this Section meets (*circle one*) Criteria A / Criteria B because _____
   Same request as was approved for original site plan.
   Please see attached supporting statements.

3. Section 6.5.C.3 of the (*circle one*) **Site Plan Review / Subdivision Regulations.** A Waiver of this Section meets (*circle one*) **Criteria A / Criteria B** because _____
Same request as was approved for original site plan.
Pedestrian entrances shall be provided every 60' unless safety/security concerns.
Please see attached supporting statements.

4. Section 6.5.C.3 of the (*circle one*) **Site Plan Review / Subdivision Regulations.** A Waiver of this Section meets (*circle one*) **Criteria A / Criteria B** because _____
New request. (Note: eliminated prior waiver request regarding doors facing public way.)
No structure may be longer than 350' unless a pedestrian passage is provided.
Please see attached supporting statements.

5. Section 6.2.L of the (*circle one*) **Site Plan Review / Subdivision Regulations.** A Waiver of this Section meets (*circle one*) **Criteria A / Criteria B** because _____
Same request as was approved for original site plan.
Requirement for curbing, wheelstops or fencing along landscaped areas.
Please see attached supporting statements.

6. Section 6.2.B.1 of the (*circle one*) **Site Plan Review / Subdivision Regulations.** A Waiver of this Section meets (*circle one*) **Criteria A / Criteria B** because _____
Same request as was approved for original site plan.
Requiring landscaped areas along front, side and rear property lines.
Please see attached supporting statements.

7. Section 6.7.B.2 of the (*circle one*) **Site Plan Review / Subdivision Regulations.** A Waiver of this Section meets (*circle one*) **Criteria A / Criteria B** because _____
Same request as was approved for original site plan.
Limiting light trespass on adjacent properties or onto streets or rights of way.
Please see attached supporting statements.

8. Section ___ of the (*circle one*) **Site Plan Review / Subdivision Regulations.** A Waiver of this Section meets (*circle one*) **Criteria A / Criteria B** because _____

SIGNATURE

I (we) hereby submit this application to the Planning Board and attest that to the best of my (our) knowledge all of the information on this application form and in the accompanying application materials and documentation is true and accurate. As the applicant or as the agent of the applicant, I attest that I am duly authorized to act in this capacity.

Signature of Applicant: Donald Smith Date: September 11, 2023

Waiver Requests Suplemental Information.

Section 6.2.D of the Site Plan Review Regulations (same as original approval)

"Landscaping around buildings shall be provided to a minimum width of 10 feet and planted with trees, shrubs, and ground cover appropriate to the architecture in order to buffer parking areas, define entrances, provide foundation planting, and soften large expanses of walls or long roof lines."

The compact nature of the site design is an effort to preserve the wetlands on the property and reduce impervious areas. The landscape areas around the buildings have been maximized while maintaining that goal. Including a full 10 feet of landscaping around each building would result in significant impacts to the wetlands and increased impervious areas.

Section 5.1.E(16) of the Site Plan Regulations (same as original approval)
"Existing trees over 12 inches in diameter, measured 4.5 feet above the ground surface, and within 25 feet of the disturbed area, must be counted and shown on the plan, if included towards fulfilling the landscaping requirement."

The design team did not anticipate needing this waiver at the time of the survey of the site and the specific locations of 12-inch trees were not collected. The areas left undisturbed have a mix of vegetation and will provide good screening.

Section 6.5.C.3 of the Site Plan Review Regulations (same as original approval)

"Pedestrian entrances shall be provided at least every 60 linear feet along the ground floor of the primary façade unless such egress would create safety or security concerns for the building's use."

Each building includes three (3) pedestrian entrances into common space foyers and hallways. Providing additional entries would lengthen the buildings and increase the impacts of the development. The project would have to expand to the south towards the wildlife corridor. Each residential unit does have a large sliding door, which adds doors along the buildings' facades. The facades also have varying planes and architectural features to break up the massing of the buildings.

Section 6.5.C.3 of the Site Plan Review Regulations (New request)

"No structure may be longer than 350 feet unless a pedestrian passage is provided at midway (or similar) along the structure length."

The 1-story community amenity building the three 4-story apartment buildings each meet this requirement on their own, but one of the 4-story apartment buildings is proposed to have a lobby connection to the amenity building. This lobby connection is to allow residents of the apartment building to access the amenity building's social and fitness spaces without going out into the elements. The very different scales of the buildings (large 4-story apartment building vs small 1-story amenity building) and articulated architecture will ensure that the two buildings do not appear to be one long building. The alternative of adding a gap between the two buildings would result in a less favorable living experience for the residents of the apartment building and would

also result in the amenity building being pushed further to the south, extending the limits of the developed area at the expense of the wildlife corridor.

Section 6.2.L of the Site Plan Review Regulations (same as original approval)
"Landscaped areas within and adjacent to all parking and vehicular areas shall be protected by curbing, wheel stops, or fencing, with the potential exception of areas containing LID features, if deemed to be acceptable by the Reviewing Engineer and if approved by the Planning Board."

This request is specific to the east side of the eastern parking lot. Stormwater will flow away from the edge in question so curbing is not needed for stormwater control. Wheel stops are regularly broken or damaged by snowplows and cause damage to snowplows. Trees, fencing, and other visual clues will let drivers know where to stop pulling forward in a parking space.

Section 6.2.B.1 of the Site Plan Review Regulations (same as original approval)
"A minimum landscaped area along the front, side and rear property lines shall be provided. This area shall be a minimum of 15 feet in width for the length of each property line and shall comply with the design requirements set forth in 6.2.B.2-7, 10 and 11."

This request is specific to the northern property line of the site where the project abuts undeveloped land. The driveway is ten (10) feet off the property line. It is also higher than existing ground by as much as four (4) feet in order to maintain appropriate roadway slopes. There is a gravel shoulder and guard rail along the northern edge of the driveway, and a stone 1:1 slope drops behind the guard rail to the existing ground just off the property line. These site elements combine to create a space that is not ideal for planting trees and shrubs. The driveway is as far south as it can be without having to move the entire site design to the south. That would push the development further towards the wildlife corridor.

Section 6.7.B.2 of the Site Plan Review Regulations (new request to accommodate City's updated lighting specifications for the entrance and crosswalk areas)

"Light fixtures shall be located, mounted, aimed, and shielded so as to not cause light trespass upon adjacent properties or onto streets or rights-of-way in excess of the following levels: The light intensity at adjoining streets or commercial property boundaries shall not exceed 0.5 foot-candles at grade level, and the light intensity at adjoining residential property boundaries shall not exceed 0.1 foot-candles at grade level."

This request is specific to the site entrance areas and pedestrian crosswalk in order to provide safe lighting levels in a manner recommended by City staff.

Waiver in prior approval that is no longer required:

Section 6.5.C.2 of the Site Plan Review Regulations
Prior approval included a waiver for "At least one primary entrance to the building shall face the public way on which the lot has frontage."
The modified plan includes doors facing the public way on all buildings and this waiver is no longer required.

CITY OF LEBANON, NH SITE PLAN REVIEW REGULATIONS TECHNICAL CHECKLIST	
PROJECT NAME: Marek 2	
APPLICANT: SPNH Lebanon North, LLC	**DATE:** 09/11/2023
GENERAL SUBMISSION REQUIREMENTS:	

All applications to the Planning Board for Site Plan Review must be submitted by <u>12:00 Noon</u> on the day of the filing cutoff. [§4.7.B] **Submissions must be accompanied by the following information or review of the application may be delayed:**

A properly completed and signed Application Form *(available at www.lebanonnh.gov)*. [§5.1.A]

The appropriate filing fees. [§5.1.B]

A written project description. [§5.1.C]

A list of the names and mailing addresses of all persons to be notified, by certified mail, of the public hearing. [§5.1.D]

A completed and signed Application for Waivers *(available at www.lebanonnh.gov)* [§5.1.G.3]

A completed and signed Technical Checklist *(available at www.lebanonnh.gov)*. [§4.7.B] *[Applicants must complete the entire checklist to ensure that all necessary information and materials have been provided with the application or that written requests for waivers have been properly provided in accordance with Article VII of the Site Plan Review Regulations, as appropriate.]*

Two (2) full-size sets of the Site Plan set. [§5.1.E]

A digital copy of the Site Plan set in .PDF format. [§5.1.F]

<u>NOTE</u>: Applications shall contain sufficient information to enable the City Staff and the Planning Board to evaluate the proposed development for compliance with the Zoning Ordinance, the Planning Board's Regulations, and other applicable City Codes, and for the Planning Board to make an informed decision.

All required application materials shall be submitted as a single inclusive package, including any appropriate waiver requests as permitted by the Regulations. Submission of a complete application package ensures that the review process by City Staff is as efficient and effective as possible.

The purpose of the filing deadline is to provide adequate time for City review of the proposal. Submission of any altered, additional, or substitute application materials required by Article V of these Regulations, subsequent to the filing deadline, other than as directed by City Staff, shall cause the application to be deemed untimely filed, and such application shall not be heard until a subsequent month.

PLAN SUBMITTAL TECHNICAL CHECKLIST:

NOTE: Site plan drawings shall include the information described below pursuant to Article V of the Lebanon Site Plan Review Regulations. Plans shall be submitted on sheets no larger than 24" x 36". Plan sets with multiple sheets shall include sheets of uniform size and be bound on the left edge. When more than three (3) sheets are required, an additional cover sheet shall be attached including a table of contents. A scale of not smaller than one (1) inch equals 40 feet is suggested. All lettering shall be of a size and type that is legible.

In order to facilitate the use of the City's Geographic Information System (GIS) for planning purposes, all surveys and engineered plans submitted for Site Plan Review shall utilize the NH State Plane Coordinate system and shall reference the North American Vertical Datum of 1988 (NAVD 88), unless prior approval to use an alternate coordinate system and/or vertical datum is granted by the Planning & Development Department.

A written request for waiver shall be required, pursuant to Article VII of the Site Plan Review Regulations, for any submission requirement for which the information or data is not provided by the applicant. [§5.1.G(4)] NOTE: The submission requirements described in paragraphs 5.1.E(1) through 5.1.E(4) shall not be waivable under the procedures of Article VII of the Site Plan Review Regulations. [§5.1.E]

[Checklist begins on following page]

Plan Requirements	**Info. Provided**	**Waiver Sought**
5.1.E(1) - Vicinity sketch (suggested scale: 1" = 500').	☒	*N/A*
5.1.E(2) - Names and mailing addresses of Applicant; Owner(s) of Record of site; Owners of abutting properties; and Holders of any easements, rights-of-way, or other restrictions.	☒	*N/A*
5.1.E(3) - Names and business addresses of preparer(s) of the plan, and every surveyor, engineer, architect, soil scientist, or wetlands scientist whose professional seal appears on any plan or document submitted to the Board.	☒	*N/A*
5.1.E(4) - The following information shall be provided on the first page (or cover page, if applicable) of the Site Plan:		
a. Name of the City and County in which the development is proposed;	☒	*N/A*
b. North arrow;	☒	*N/A*
c. Scale of the plan;	☒	*N/A*
d. Date of the plan and of any revisions to the plan; (NOTE: The date on the plan at the time of initial submission for application review shall be included on all subsequent submissions to the City. Any subsequent change(s) to the plan shall include a revision date and description of the revision(s).)	☒	*N/A*
e. The following basic site information in TABLE FORM:		
1. Zoning designation for subject property;	☒	*N/A*
2. Tax Map and Lot number(s) for subject property;	☒	*N/A*
3. Area of lot;	☒	*N/A*
4. Gross floor area of existing and proposed buildings/additions;	☒	*N/A*
5. Number of existing and proposed on- and off-street parking spaces as a table. The table must identify (i) the number of required (minimum) parking spaces and the permitted (maximum) number of parking spaces and the calculations for each, (ii) future proposed, and (iii) existing parking capacity. If the site is part of an existing development or subdivision, the master table must provide such information for all related sites and phases, individually and as a project total;	☒	*N/A*
6. Number of existing and proposed short- and long-term bicycle storage spaces;	☒	*N/A*
7. Number of existing and proposed loading spaces;	☒	*N/A*
8. Height of existing and proposed buildings/additions;	☒	*N/A*
9. Number of stories and gross square footage of each;	☒	*N/A*
10. Proposed use;	☒	*N/A*
11. Required and proposed front, side, and rear yard setbacks	☒	*N/A*
12. Maximum allowable lot coverage with existing and proposed calculations;	☒	*N/A*
13. Indication of whether or not the property is subject to any City Overlay districts (for example, the Wetlands Conservation District or Flood Plain District) or to NHDES Shoreland Water Quality Protection jurisdiction.	☒	*N/A*
5.1.E(5) - Current survey certified by a land surveyor licensed in NH, depicting perimeter boundaries of the lot(s), with compass bearings, distances, and lot areas, and depicting the location of existing improvements on property.	☒	☐
5.1.E(5) - Width and location of rights-of-way and/or easements on property.	☒	☐

Plan Requirements *(cont.)*	**Info. Provided**	**Waiver Sought**
5.1.E(6) - Existing and proposed grades, including topographic contours with spot elevations, (referenced to USGS or FEMA Flood Insurance Rate Map datums, as appropriate) prepared by a professional engineer or land surveyor licensed in NH. (Where grades are less than 20%, contours shall be at 2 ft. intervals; otherwise they shall be at 5 ft. intervals.)	☒	☐
5.1.E(7) - Shape, size, height, and location of all existing structures located on site and within 200 feet of site.	☒	☐
5.1.E(7) - Elevation views indicating shape, size, height, and location of all proposed structures, including expansions of or additions to existing buildings. Such elevation views shall provide sufficient detail to allow for review by the Board and City staff of the adequacy of proposed access and egress points, walkways, lighting, and other site-related improvements.	☒	☐
5.1.E(8) - Location of existing natural features such as streams, marshes, lakes, ponds, wetlands, rock outcrops, or wooded areas, and existing man-made features such as roads and structures. Indicate those natural and man-made features that are to be removed, retained, or altered.	☒	☐
5.1.E(8) - Wetlands on the property, if any, shall be delineated by a NH Certified Wetlands Scientist, whose seal and signature shall appear on the plan. Documentation in the form of U.S. Army Corps of Engineers New England District Wetlands Delineation Data Sheets and/or other field notes and materials concerning the delineation shall be submitted.	☒	☐
5.1.E(9) - Zoning District, Tax Map and Lot number, and use of abutting properties within 200 feet of property.	☒	☐
5.1.E(9) - Location of streets, pedestrian paths/trails, and bicycle routes within 200 feet of the site boundary; and the location of curb cuts and vehicle accesses within 200 feet of the site boundary.	☒	☐
5.1.E(10) - Proposed streets, driveways, emergency vehicle accesses, parking spaces, and sidewalks, with indication of dimensions and direction of travel. Show required sight distances at curb cuts and dimensions for the inside radii of all curves.	☒	☐
5.1.E(10) - Vehicle and bicycle parking spaces shall be numbered.	☒	☐
5.1.E(10) - Loading spaces and facilities used in connection with any structures on the site shall be shown	☒	☐
5.1.E(10) - Total square footage and percentage of the lot covered by impervious cover shall be shown.	☒	☐
5.1.E(11) - Parking area safety measures including raised crosswalks/speed tables, signage, walkway lighting, striping and similar markings such as dedicated pedestrian/bicycle crossings and lanes through parking areas, fire lanes, compact and/or electric vehicle parking/charging, parking wayfinding, ADA signage and access aisles.	☒	☐
5.1.E(12) - Size and location of all existing and proposed public and private utilities. *(Note: the applicant is encouraged to submit a Sewer Use Permit Application and obtain a Notice of Permitted Allocation, and to obtain a Water Use Permit prior to submission of the Site Plan Review application.)*	☒	☐

Plan Requirements *(cont.)*	**Info. Provided**	**Waiver Sought**
5.1.E(13) - Plan for outdoor lighting showing proposed location, mounting height, fixture type, lamp type, color correlated temperature (CCT), and wattage of all exterior free-standing lighting or building-mounted fixtures.	☒	☐
5.1.E(13) - Analyses and illuminance-level diagrams, to include average and minimum foot-candle measurements, showing that proposed installation conforms to the lighting-level standards in Site Plan Review Regulations.	☒	☐
5.1.E(13) - Manufacturer's specification information for each proposed light fixture and lamp (NOTE: This information may be provided on the plan or as a separate attachment).	☒	☐
5.1.E(13) - Drawings of all relevant building elevations showing location and height of all building-mounted fixtures, illumination levels of walls or architectural features, and aiming points for any remote light fixtures.	☒	☐
5.1.E(14) - Plan for location of free-standing or building-mounted signs, including location, mounting, aiming, and shielding of any remote light fixtures for externally-lit signs.	☒	☐
5.1.E(14) - For internally-lit signs, relevant information concerning the method of illumination and the opacity of the sign background, showing that the proposed installation conforms to the requirements of the Regulations.	☒	☐
5.1.E(15) - 100-yr flood elevation, floodway, and floodplain limits, where relevant.	N/A	☐
5.1.E(16) - Landscaping plan showing proposed new plantings to be installed and existing natural vegetation to be retained. Plan shall show in detail the number, size (height and/or caliper), and species (botanical and common names) of all proposed shrubs and trees.	☒	☐
5.1.E(16) - Existing trees over 12 inches in diameter (measured 4.5 feet above ground surface) within 25 feet of the disturbed area, must be counted and shown on the plan, if included towards fulfilling landscaping requirements.	☐	☒
5.1.E(16) - Calculations for square footage of perimeter landscaping.	☒	☐
5.1.E(16) - Parking lot shading calculations shall be provided by depicting new trees and shrubs at 10-year crown size.	☒	☐
5.1.E(17) - Existing and proposed surface and subsurface storm drainage facilities, including City storm drainage facilities located within 200' of site.	☒	☐
5.1.E(17) - Plans for retention, detention, slow release, and treatment of storm water shall be provided, where necessary.	☒	☐
5.1.E(17) - Drainage plans prepared by a professional engineer registered in NH, whose seal and signature shall appear on plan(s).	☒	☐
5.1.E(18) – Section 6.6. Stormwater Management submission requirements.	See Stormwater Checklist	
5.1.E(19) - Plans for snow removal and storage.	☒	☐
5.1.E(20) - A plan for the development showing provisions for automobile, transit, bicyclist, and pedestrian access and circulation. Such plan shall show both existing and proposed means of access to the site including connections with, public streets, sidewalks, transit stops, and formal paths/trails. Plans shall include any traffic calming and traffic control devices necessary in conjunction with the site development, as well as the location of all existing transit routes and transit stops located or passing within 1/4 mile (1,320 feet) of the property.	☒	☐

Plan Requirements *(cont.)*	**Info. Provided**	**Waiver Sought**
5.1.E(21) - Construction detail drawings including, but not limited to, pavements, walks, steps, curbing, drainage structures, water and/or sewer utilities, ground-mounted signage (e,g,, fire lanes, ADA parking, commercial), surface treatments, transit shelters, energy generation units (e.g., solar), bike rack style, electric vehicle charging, outdoor lighting, outdoor furniture, retaining walls, tree boxes and other site systems or structures. Accompanying specifications and cutsheets may be required.	☒	☐
5.1.E(21) - Where applicable, roadway, drainage, water and sewer utility profile drawings shall be provided at a scale of 1"=40 feet (horizontal) and 1"=4 feet (vertical) and typical cross-section drawings shall be provided at a scale of 1"=5 feet (horizontal and vertical), unless prior approval is granted by the City Engineer.	☒	☐
5.1.E(22) - Depict any current and proposed easements, rights-of-way, and deed restrictions including those related to sewer, electrical utility, shared access, etc.	N/A	☐
5.1.E(23) - For multi-family structures, plans for on-site recreational facilities.	☒	☐
5.1.E(24) - Plans for fire protection including emergency vehicle turn radius diagrams, if requested by the Lebanon Fire Department.	☒	☐
Supporting Documents and Information, Where Applicable	**Info. Provided**	**Not Applicable**
5.1.G(1) - An estimated timetable, to include phasing schedules, for construction and completion of buildings, parking, facilities, landscaping, and other required improvements.	☒	☐
5.1.G(2) - Any development estimated to generate a net increase of 100 peak hour trips or 1,000 average daily trips (based upon the most current edition of the ITE Trip Generation Manual) shall prepare and submit a Traffic Impact Study in accordance with standard traffic analysis conventions as set forth by the NHDOT. The Board may, at its discretion, require the submission of a Traffic Impact Study for developments estimated to generate less than 100 peak hour trips or 1,000 average daily trips if the Board has reason to believe such development could adversely affect levels of service or have other adverse impacts.	☒	☐
5.1.G(3) – Written requests for waivers from all applicable provisions of these Regulations shall be provided pursuant to Article VII – "Waiver Procedure". *(note: use Application for Waivers form).*	☒	☐
5.1.G(4) – For multi-family dwelling developments and mixed-use developments resulting in a net increase of 50 dwelling units or more, the application shall include the information and impact statements identified in Section 6.9.B.	☒	☐

NOTE: THE APPLICANT IS RESPONSIBLE FOR PROVIDING THE REQUIRED INFORMATION PURSUANT TO ARTICLE V OF THE SITE PLAN REVIEW REGULATIONS. PLEASE BE AWARE THAT THIS CHECKLIST IS FOR INFORMATION AND GUIDANCE ONLY AND DOES NOT REPRESENT THE LAW DICTATING SUBMITTAL REQUIREMENTS NOR IS IT COMPLETE AND INCLUSIVE THEREOF.

Completed By: Nicholas A. Fiore

(Last Revised 4/19/2021)

CITY OF LEBANON, NH STORMWATER REVIEW REGULATIONS TECHNICAL CHECKLIST	
PROJECT NAME: Marek 2	
APPLICANT: SPNH Lebanon North, LLC	**DATE:** 09/11/2023

NOTE: Stormwater plans shall include the information described below pursuant to Article VI of the Lebanon Site Plan Review Regulations. Plans shall be submitted on sheets no larger than 24" x 36". Plan sets with multiple sheets shall include sheets of uniform size and be bound on the left edge. When more than three (3) sheets are required, an additional cover sheet shall be attached including a table of contents. A scale of not smaller than one (1) inch equals 40 feet is suggested. All lettering shall be of a size and type that is legible.

In order to facilitate the use of the City's Geographic Information System (GIS) for planning purposes, all surveys and engineered plans submitted shall utilize the NH State Plane Coordinate system and shall reference the North American Vertical Datum of 1988 (NAVD 88), unless prior approval to use an alternate coordinate system and/or vertical datum is granted by the Planning Office.

A written request for waiver shall be required, pursuant to Article VII of the Site Plan Review Regulations, for any submission requirement for which the information or data is not provided by the applicant. [§6.6.I]

[Stormwater checklist begins on following page]

N.Fiore: Provided with previous application.

N.Fiore: Provided with previous application.

Plan Requirements	**Info. Provided**	**Waiver Sought**
6.6.C.1 (1) - An Existing Conditions S.M.P showing all pre-development:		
a. Surface water bodies and wetlands	☒	☐
b. Drainage patterns	☒	☐
c. Flood plains and floodways (with elevations)	☒	☐
d. Watershed boundaries	☒	☐
e. Buffer zones	☒	☐
f. Topographic contours with minimum 2-foot intervals	☒	☐
g. Buildings / structures	☒	☐
h. Pavement	☒	☐
i. Utilities	☒	☐
j. Soils information with coding as HSG-A, B, C, or D (High Intensity Soil Survey (HISS) mapping may be required per request of the City Engineer).	☒	☐
1. The plan shall also include the following elements:		
a. scale bar	☒	☐
b. north arrow	☒	☐
c. title block with project name	☒	☐
d. applicant's name	☒	☐
e. map and parcel number	☒	☐
f. designer's stamp	☒	☐
g. soil and/or wetland scientist's stamp (if applicable)	☒	☐
h. legend	☒	☐
i. locus plan	☒	☐
j. benchmarks	☒	☐
k. notes with datum and other plan references	☒	☐
l. instructions	☒	☐
m. detail descriptions	☒	☐
6.6.C.1 (2) - A Proposed Conditions SMP showing all proposed post-development temporary and permanent stormwater management system elements, erosion and sediment control Best Management Practices (BMP), and all important hydrologic features. The Proposed Conditions S.M.P must be at the same scale as the Existing Conditions SMP, with consistent title block, plan features, and descriptors including but not limited to the following:		
a. Existing and proposed topographic contours (2-foot minimum contour interval; 1-foot contour intervals may be required for sites with limited relief and/or where proposed stormwater outfalls are located adjacent to buffer zones.	☒	☐
b. Proposed areas of disturbance with total area of disturbance clearly labeled in square feet	☒	☐
c. Existing and proposed buildings and structures	☒	☐
d. Stormwater discharge locations labeled and matched to the drainage analyses	☒	☐
e. Wells and sanitary protective radii, if applicable	☒	☐
f. Septic systems, if applicable	☒	☐

Plan Requirements (*cont.*)	**Info. Provided**	**Waiver Sought**
g. Plan references and notes (including sequence of soil disturbance)	X ☐	☐
h. Proposed and existing public and private utilities	☒	☐
i. Proposed project components to become property of or the responsibility of the City shall be labeled as such	☒	☐
j. Existing and proposed impervious cover, with areas used to calculate effective impervious cover (EIC, as defined herein) clearly identified and the square footage of each type identified and labeled.	☒	☐
k. Test Pit(s) locations and data where stormwater practices are proposed, as appropriate.	☒	☐
l. Details of individual design elements shown on separate plan sheets following the Proposed Conditions SMP.	☒	☐
The Existing Conditions SMP & the Proposed Conditions SMP shall be provided on sheets no larger than 24" x 36", at a scale of one (1) inch = 20 feet for urban areas, and one (1) inch = 40 feet for non-urban areas. The City Engineer will make the final determination as to the appropriate scale, ensuring that all important site and hydrologic features are easily recognized. If plan shall encompass more than two (2) sheets, at the required 1:40 or 1:20 scale, a separate large scale representation plan sheet (e.g. 1:100) is required to be provided, so as to show entirety of site, as well as off-site contributing areas.		
6.6.C.2 - In addition to the above described SMP plan sheets, the following SMP supplemental information is required: 1. A drainage analysis that includes calculations comparing pre- and post-development stormwater runoff rates (cubic feet per minute) and volumes (cubic feet) based on a 1-inch rainstorm, and the 2-year, 25-year, 50-year, and 100-year, 24-hour frequency storms. Calculations shall include, but not be limited to, the sizing of all structures and BMPs, including sizing of emergency overflow structures based on the 50-year 24-hour frequency storm discharge rate, with 1-foot of free-board. Storm rates shall be based on current design depths from the Northeast Regional Climate Center - http://precip.eas.cornell.edu. *Any site that was primarily wooded in the last five years shall be considered undisturbed woods Any site from which wooded vegetation has been removed within 5 years prior to the first submission to the planning board with respect to a proposed development, or upon which, at some earlier time, clearing has occurred in anticipation of development, shall be treated as undisturbed woodland for purposes of calculating pre-development runoff volumes. For purposes of this paragraph any tree cutting which occurred without leaving stands of healthy, growing trees within areas near waters and highways, as required by RSA 227-J:9, I, shall be presumed to have occurred in anticipation of development*	☒	☐

Plan Requirements (*cont.*)	**Info. Provided**	**Waiver Sought**
2. A drainage analysis results summary tabulated (pre & post) for each proposed outfall or catchment outlet point including runoff rates and volumes for each storm event analyzed above.	☒	☐
3. An Erosion and Sediment Control Plan for all proposed construction activities in accordance with the NH Stormwater Management Manual Volume 3, (December 2008 or current revision; downloadable from the website)	☒	☐
4. A comprehensive Operation and Maintenance Plan for long-term maintenance of all proposed stormwater management elements and BMPs including the proposed schedule of inspections and anticipated maintenance (see section H.2 Operations & Maintenance Plan for detailed requirements).	☒	☐
6.6.D - Phased Development: For phased developments, the plans and calculation requirements under this section (6.6) shall apply as though the development of the entire parcel were being proposed in one single application. The review and approval process for phased development applications is provided in section 4.9 of the Lebanon Site Plan Regulations.	☒	☐

NOTE: THE APPLICANT IS RESPONSIBLE FOR PROVIDING THE REQUIRED INFORMATION PURSUANT TO ARTICLE VI OF THE SITE PLAN REVIEW REGULATIONS. PLEASE BE AWARE THAT THIS CHECKLIST IS FOR INFORMATION AND GUIDANCE ONLY AND DOES NOT REPRESENT THE LAW DICTATING SUBMITTAL REQUIREMENTS NOR IS IT COMPLETE AND INCLUSIVE THEREOF.

Completed By: Nicholas A. Fiore

(Last Revised 04/19/2021)

Planning office Use Only:

Date Received___/___/___ Checklist Complete YES or NO Checked by:_____

MAREK 2
SITE DEVELOPMENT PLANS

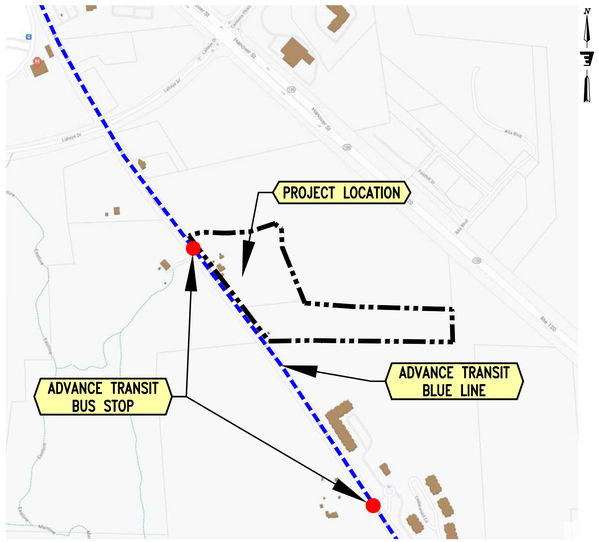

LEBANON GIS MAP
1"=500'

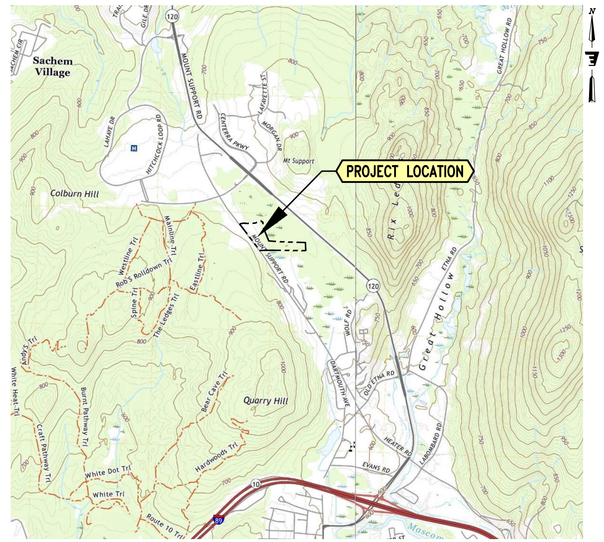

USGS MAP
1"=2,000'

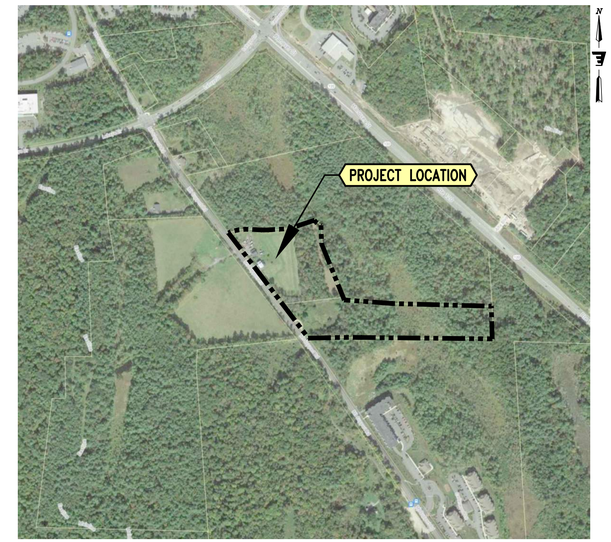

AERIAL PHOTOGRAPH
1"=250'

ZONING CHART

	Existing	Proposed	Notes
Zoning District	R1	R1	
Tax Map / Lot #	24 / 9 & 24 / 10	24 / 9	
Use	One-Family Dwelling	Multi-Family Dwelling	
Number of Dwelling Units	1 & 0	204	
Property Class	3	1	
Minimum Area of Lot	10,000 sf	14.14 acres	
Area of Lot (acres)	6.55 & 7.66	14.21	1
Building Footprints (sf)			
Building 1	1,190	19,475	
Building 2	1,402	19,475	
Building 3	225	19,475	2
Amenities Building	-	8,348	
Total Footprint	2,817	66,773	
Building Heights	45' max	45' max	3
Building 1	20'+/-	45'	
Building 2	22'+/-	45'	2
Building 3		45'	
Amenities Building		18' 10"	
Number of Stories	2	4	
Building Coverage Max	15%	25%	
Building Coverage	0.99%	10.79%	
Parking Spaces Required	2	306	4
Parking Spaces Provided	5±	314	
Loading Spaces	0	0	
Bicycle Spaces - Short-Term / Long Term	0	32 / 100+	5
Impervious Area (sf)	8,670	162,471	
Impervious Area (% of lot)	3.0%	26.25%	
Setbacks - Required / Provided (ft)			
Front	25' / 21.8'	20' / 27.4'	
Side	25' / 125.9'	15' / 64.3'	
Rear	30' / 436.4'	20' / 145.2'	
City Overlay Districts	Wetlands	Wetlands	
NHDES Shorland Jurisdiction	NA	NA	
FEMA Flood Hazard Designation	Zone X	Zone X	6

Notes:
1. AREA OF LOT PER BOUNDARY SURVEY BY LATITUDE LAND SURVEYING
2. PROPOSED BUILDING AREA AND HEIGHT PER THE ARCHITECTURAL TEAM.
3. PER SECTION 308.4 BUILDING HEIGHTS OF UP TO 55' ARE ALLOWED BY CONDITIONAL USE PERMIT.
4. SEE PARKING SUMMARY TABLE FOR ADDITIONAL PARKING TALLY INFORMATION.
5. SHORT-TERM SPACES PROVIDED AT RACKS NEAR BUILDING ENTRNACES. LONG-TERM SPACES ARE PROVIDED IN 51 4'X10' LOCKERS IN THE GARAGES (17 IN EACH GARAGE) AND A 1,700+/- SF BIKE STORAGE ROOM IN THE BASEMENT ON THE AMENITIES BUILDING.
6. PER FEMA ZONE X IS AN AREA OF MINIMAL FLOOD HAZARD

BUILDING PROGRAM MATRIX

		1-Bed	2-Bed	Total	GSF
Building 1	Level 0	0	0	0	19,423
	Level 1	9	8	17	19,320
	Level 2	8	9	17	19,446
	Level 3	8	9	17	19,446
	Level 4	8	9	17	19,446
	Total Units	33	35	68	97,081
	Total Bedrooms	33	70	103	
Building 2	Level 0	0	0	0	19,423
	Level 1	9	8	17	19,320
	Level 2	8	9	17	19,446
	Level 3	8	9	17	19,446
	Level 4	8	9	17	19,446
	Total Units	33	35	68	97,081
	Total Bedrooms	33	70	103	
Building 3	Level 0	0	0	0	19,423
	Level 1	9	8	17	19,320
	Level 2	8	9	17	19,446
	Level 3	8	9	17	19,446
	Level 4	8	9	17	19,446
	Total Units	33	35	68	97,081
	Total Bedrooms	33	70	103	
Amenities Building	Level 0	0	0	0	7,165
	Level 1	0	0	0	8,338
	Total				15,503
		1-Bed	2-Bed	Total	
Project Totals	Units	99	105	204	306,746
	Bedrooms	99	210	309	
	Percentage	49%	51%	100%	

TABLE OF CONTENTS

SHEET	TITLE	CONSULTANT	PAGE
C0.0	COVER SHEET	ENGINEERING VENTURES	1 of 46
C0.1	SITE LEGEND AND NOTES	ENGINEERING VENTURES	2 of 46
C0.2	SITE CONTEXT EXHIBIT	ENGINEERING VENTURES	3 of 46
C0.3	PROJECT PHASING PLAN	ENGINEERING VENTURES	4 of 46
	BOUNDARY SURVEY PLAT	LATITUDES LAND SURVEYING	5 of 46
C1.0	EXISTING CONDITIONS OVERVIEW PLAN	ENGINEERING VENTURES	6 of 46
C1.1	EXISTING CONDITIONS PLAN (1 OF 2)	ENGINEERING VENTURES	7 of 46
C1.2	EXISTING CONDITIONS PLAN (2 OF 2)	ENGINEERING VENTURES	8 of 46
C2.0	SITE OVERVIEW PLAN	ENGINEERING VENTURES	9 of 46
C2.1	SITE LAYOUT PLAN (1 OF 2)	ENGINEERING VENTURES	10 of 46
C2.2	SITE LAYOUT PLAN (2 OF 2)	ENGINEERING VENTURES	11 of 46
C2.3	GRADING AND DRAINAGE PLAN (1 OF 2)	ENGINEERING VENTURES	12 of 46
C2.4	GRADING AND DRAINAGE PLAN (2 OF 2)	ENGINEERING VENTURES	13 of 46
C2.5	SITE CIRCULATION - SIGNAGE AND STRIPING	ENGINEERING VENTURES	14 of 46
C2.6	SITE CIRCULATION - FIRE TRUCK TURNING MOVEMENTS	ENGINEERING VENTURES	15 of 46
C2.7	UTILITIES PLAN	ENGINEERING VENTURES	16 of 46
C2.8	EROSION PREVENTION AND SEDIMENT CONTROL PLAN	ENGINEERING VENTURES	17 of 46
C3.1	WATER PLAN AND PROFILE	ENGINEERING VENTURES	18 of 46
C3.2	SEWER LINE PLAN AND PROFILE	ENGINEERING VENTURES	19 of 46
C4.1	SITE DETAILS (1 OF 2)	ENGINEERING VENTURES	20 of 46
C4.2	SITE DETAILS (2 OF 2)	ENGINEERING VENTURES	21 of 46
C4.3	STORMWATER DETAILS (1 OF 3)	ENGINEERING VENTURES	22 of 46
C4.4	STORMWATER DETAILS (2 OF 3)	ENGINEERING VENTURES	23 of 46
C4.4a	STORMWATER DETAILS (3 OF 3)	ENGINEERING VENTURES	24 of 46
C4.5	SEWER DETAILS	ENGINEERING VENTURES	25 of 46
C4.6	WATER DETAILS	ENGINEERING VENTURES	26 of 46
C4.7	EROSION PREVENTION AND SEDIMENT CONTROL DETAILS	ENGINEERING VENTURES	27 of 46
L1.0	LANDSCAPE REQUIREMENTS	PARK ARCHITECTURE	28 of 46
L1.1	LANDSCAPE REQUIREMENTS	PARK ARCHITECTURE	29 of 46
L2.0	SITE LANDSCAPE PLAN (1 OF 2)	PARK ARCHITECTURE	30 of 46
L2.1	SITE LANDSCAPE PLAN (2 OF 2)	PARK ARCHITECTURE	31 of 46
L2.2	LANDSCAPE COLOR PLAN	PARK ARCHITECTURE	32 of 46
L3.0	SITE ENLARGEMENT PLAN (1 OF 3)	PARK ARCHITECTURE	33 of 46
L3.1	SITE ENLARGEMENT PLAN (2 OF 3)	PARK ARCHITECTURE	34 of 46
L3.2	SITE ENLARGEMENT PLAN (3 OF 3)	PARK ARCHITECTURE	35 of 46
L4.0	LANDSCAPE DETAILS (1 OF 3)	PARK ARCHITECTURE	36 of 46
L4.1	LANDSCAPE DETAILS (2 OF 3)	PARK ARCHITECTURE	37 of 46
L4.2	LANDSCAPE DETAILS (3 OF 3)	PARK ARCHITECTURE	38 of 46
L5.0	SITE LIGHTING PLAN (1 OF 2)	PARK ARCHITECTURE	39 of 46
L5.1	SITE LIGHTING PLAN (2 OF 2)	PARK ARCHITECTURE	40 of 46
L5.2	SITE LIGHTING PHOTOMETRIC PLAN	PARK ARCHITECTURE	41 of 46
L5.3	SITE LIGHTING DETAILS (1 OF 2)	PARK ARCHITECTURE	42 of 46
L5.4	SITE LIGHTING DETAILS (2 OF 2)	PARK ARCHITECTURE	43 of 46
B1-A4.01	BUILDING ELEVATIONS - BUILDING 3	THE ARCHITECTURAL TEAM	44 of 46
B2-A4.01	BUILDING ELEVATIONS - 25 MECHANIC	THE ARCHITECTURAL TEAM	45 of 46
B3-A4.01	BUILDING 2 & BOILER BLDG. ELEVATIONS	THE ARCHITECTURAL TEAM	46 of 46

PARKING SUMMARY

Use	Independent Variable	Independent Variable Value	Min. Spaces Required	120% of Min	150% of Min	Parking Space Provided		
						In Structures	Outdoors	Total
Apartments	1.5/Unit	204	306	367.2	459	135	179	314

DENSITY CALCULATIONS

Minimum Lot Size Class 1 Lot	Additional Area per Dwelling Unit After 2	Total Dwelling Units	Minimum Lot Size Equation	Minimum Lot Size Square Feet	Minimum Lot Size Acres
10,000 sf	3,000 sf	204	A = 10,000sf + 202(3,000sf)	616,000	14.14

1. Density calculations per Table 308.3 of the City of Lebanon Zoning Ordinace
2. A Class 1 Lot is a legal parcel of land services by municipal water and municipal sewerage.

SUBJECT PROPERTY:

TAX MAP 24 LOTS 9 AND 10
CITY OF LEBANON
GRAFTON COUNTY
NEW HAMPSHIRE, 03766

OWNER\APPLICANT:

SPNH LEBANON NORTH, LLC
c/o SAXON PARTNERS
25 RECREATION PARK DRIVE, SUITE 204
HINGHAM, MA 02043

SITE PLAN REVIEW PLANS
09/11/2023

CONSULTANTS:

CIVIL ENGINEER:
ENGINEERING VENTURES, PC
NICHOLAS A. FIORE, PE
85 MECHANIC ST. SUITE B2-2
LEBANON, NH 03766
(603) 442-9333

LANDSCAPE ARCHITECT:
PARK ARCHITECTURE, LLC
PAUL SIMON
3 SCHOOL HOUSE LANE, SUITE #1 2ND FLOOR
ETNA, NH 03750
(603) 6433400

ARCHITECT:
THE ARCHITECTURAL TEAM, INC
JAY SZYMANSKI, AA
50 COMMANDANT'S WAY AT ADMIRAL'S HILL
CHELSEA, MA 02150
(617) 889-4402

TOPOGRAPHIC SURVEY:
LATITUDES LAND SURVEYING
NATE YAGER, LLS
129B SPRUCE STREET
BURLINGTON, VT 05401
(802) 825-6545

WETLAND SCIENTIST:
A&D KLUMB ENVIRONMENTAL, LLC
AUDRA L. KLUMB, CWS, CESSWI
34 CENTENNIAL DRIVE
WEBSTER, NH 03303

Stamp

No.	Description	Date

ENGINEERING VENTURES PC
208 Flynn Avenue, Suite 2A, Burlington, VT 05401 • 802-863-6225
85 Mechanic Street, Suite E2-3, Lebanon, NH 03766 • 603-442-9333
414 Union Street, Schenectady, NY 12305 • 518-630-9614
www.engineeringventures.com

SPNH LEBANON NORTH, LLC
c/o SAXON PARTNERS
25 RECREATION PARK DRIVE, SUITE 204
HINGHAM, MA 02043
781-875-3300

Sheet Title: COVER SHEET

Project Title: MAREK 2
392 & 402 MT SUPPORT ROAD
CITY OF LEBANON, GRAFTON COUNTY, NEW HAMPSHIRE

EV Project #	22715
Drawn By:	JWF
Checked By:	NAF
Scale:	NO SCALE
Date:	09/11/2023

C0.0

PLOTTED: 9/10/2023 3:33 PM
S:\PROJECTS\3-2022\2715 MH 402 MT SUPPORT - SAXON\DWG\SHEET FILES\2715 C0.0 COVER SHEET.DWG

STANDARD ABBREVIATIONS

BENCHMARK	BM	END OF VERTICAL CURVE ELEVATION	EVCE	LIMITS OF CONSTRUCTION	LOC	REINFORCED CONCRETE PIPE	RCP
BEGINNING OF VERTICAL CURVE ELEVATION	BVCE	END OF VERTICAL CURVE STATION	EVCS	LIMITS OF DISTURBANCE	LOD	RIGHT-OF-WAY	ROW
BEGINNING OF VERTICAL CURVE STATION	BVCS	EXISTING	EX	MAXIMUM	MAX	SANITARY	SAN
CAST-IN-PLACE	CIP	EXISTING GRADE/GROUND	EG	MINIMUM	MIN	SANITARY MANHOLE	SMH
CAST IRON	CI	FINISHED FLOOR	FF	MANUAL ON UNIFORM TRAFFIC CONTROL DEVICES	MUTCD	SEPTIC TANK	ST
CATCH BASIN	CB	FINISHED GRADE/GROUND	FG	MONITORING WELL	MW	SILT FENCE	SF
CENTERLINE	℄	FIELD INLET	FI	MONUMENT	MON	SLOPE	S=
CLEAN OUT	C/O	FLARED END SECTION	FES	NOT IN CONTRACT	NIC	STATION	STA
CORRUGATED METAL PIPE	CMP	FOOT, FEET	FT	NOT TO SCALE	NTS	STORM MANHOLE	DMH
CUBIC FEET	CF	FOOTING	FTG	POINT OF CURVATURE	PC	TANGENT	TAN
CUBIC FEET PER SECOND	CFS	FOUNDATION	FND	POINT OF INTERSECTION	PI	TANGENT TO CURVE	TC
CUBIC YARD	CY	GALLONS PER MINUTE	GPM	POLYETHYLENE, PROFESSIONAL ENGINEER	PE	TAPPING SLEEVE AND VALVE	TS&V
DIAMETER	DIA	GATE VALVE	GV	PROPERTY LINE	PL	TEMPORARY BENCHMARK	TBM
DISTRIBUTION BOX	D-BOX	HEADWALL	HW	PERC TEST, POINT OF TANGENCY	PT	TEST PIT	TP
DUCTILE IRON	DI	HIGH DENSITY POLYETHYLENE	HDPE	POLYVINYL CHLORIDE	PVC	TOP OF BANK	TOB
EDGE OF CONCRETE	EOC	HYDRANT	HYD	POINT OF VERTICAL INTERSECTION	PVI	TOP OF CURB	TOC
EDGE OF GRAVEL	EOG	INTERSECTION	INT	POND	PND	TOP OF WALL	TOW
EDGE OF PAVEMENT	EOP	INVERT	INV	QUANTITY	QTY	TYPICAL	TYP
ELECTRIC	ELEC	IRON PIN	IP	QUALITY ASSURANCE	QA	VERIFY IN FIELD	VIF
ELECTRIC MANHOLE	EMH	IRON PIPE SIZE	IPS	QUALITY CONTROL	QC	WATER VALVE	WV
ELEVATION	ELEV	LENGTH	L=	RADIUS	R=		

GENERAL NOTES

1. UTILITIES SHOWN DO NOT PURPORT TO CONSTITUTE OR REPRESENT ALL UTILITIES LOCATED UPON OR ADJACENT TO THE SURVEYED PREMISES. EXACT UTILITY LOCATIONS ARE APPROXIMATE ONLY. THE CONTRACTOR SHALL FIELD VERIFY ALL UTILITY CONFLICTS. ALL DISCREPANCIES SHALL BE REPORTED TO THE ARCHITECT, OWNER, AND ENGINEER. SITE CONTRACTOR SHALL CALL UTILITY LOCATOR SERVICE AND UTILITY OWNERS 72 HOURS, EXCLUSIVE OF WEEKENDS AND HOLIDAYS, PRIOR TO ANY DIGGING, DRILLING, OR BLASTING:
   A. CALL DIG-SAFE (TEL: #811)
   B. CONTACT ANY NON DIG-SAFE MEMBER FACILITY OPERATORS IF KNOWN. A LIST OF DIG-SAFE MEMBERS BY STATE CAN BE FOUND ON THE DIG-SAFE WEBSITE OR HERE: HTTP://WWW.DIGSAFE.COM/MEMBER_COMPANIES.PHP
   C. CALL CITY OF LEBANON PUBLIC WORKS DEPARTMENT (TEL:448-2671)

D. THE ENGINEER SHALL BE NOTIFIED IN WRITING OF ANY CONDITIONS THAT VARY FROM THOSE SHOWN ON THE PLANS. THE CONTRACTOR'S WORK SHALL NOT VARY FROM THE PLANS WITHOUT THE EXPRESSED APPROVAL FROM THE ENGINEER.

E. THE CONTRACTOR IS INSTRUCTED TO COOPERATE WITH ANY AND ALL OTHER CONTRACTORS PERFORMING WORK ON THIS JOB SITE DURING THE PERFORMANCE OF THIS CONTRACT.

F. THE CONTRACTOR SHALL RESTORE LAWNS, DRIVEWAYS, CULVERTS, SIGNS AND OTHER PUBLIC OR PRIVATE PROPERTY DAMAGED OR REMOVED TO EXISTING CONDITIONS OR BETTER AS DETERMINED BY THE ENGINEER. ANY DAMAGED TREES, SHRUBS AND/OR HEDGES SHALL BE REPLACED AT THE CONTRACTOR'S EXPENSE, UNLESS NOTED OTHERWISE.

G. THE CONTRACTOR SHALL COMPLY WITH ALL REQUIRED PERMITS.

H. THE OWNER SHALL BE RESPONSIBLE FOR OBTAINING, AND INCURRING THE COST OF ALL REQUIRED PERMITS, INSPECTIONS, AND CERTIFICATES.

I. THE CONTRACTOR WILL PROTECT EXISTING PROPERTY LINE MONUMENTATION. ANY MONUMENTATION DISTURBED OR DESTROYED, AS JUDGED BY THE ENGINEER OR OWNER SHALL BE REPLACED AT THE CONTRACTOR'S EXPENSE UNDER THE SUPERVISION OF A NEW HAMPSHIRE STATE LICENSED LAND SURVEYOR.

J. IT IS THE CONTRACTOR'S RESPONSIBILITY TO EXAMINE ALL PLAN SHEETS AND SPECIFICATIONS, AND COORDINATE WORK WITH ALL CONTRACTS FOR THE SITE.

K. IT IS THE CONTRACTOR'S RESPONSIBILITY TO CONDUCT EXPLORATORY TEST PITS AS MAY BE REQUIRED TO DETERMINE UNDERGROUND CONDITIONS.

L. ALL TRENCH EXCAVATION AND ANY REQUIRED SHEETING AND SHORING SHALL BE DONE IN ACCORDANCE WITH THE LATEST OSHA REGULATIONS FOR CONSTRUCTION.

M. CONTRACTOR SHALL BE RESPONSIBLE FOR DEWATERING AND THE MAINTENANCE OF SURFACE DRAINAGE DURING THE COURSE OF WORK.

N. MAINTAIN FLOW FOR ALL EXISTING UTILITIES, UNLESS NOTED OTHERWISE.

O. ALL SITE FILL SHALL MEET SELECTED FILL STANDARDS UNLESS NOTED OTHERWISE ON THE DRAWINGS.

P. CONTRACTOR TO GRADE ALL AREAS ON THE SITE TO PROVIDE POSITIVE DRAINAGE AWAY FROM BUILDINGS AND IMPERVIOUS SURFACES.

Q. THE CONTRACTOR SHALL BE RESPONSIBLE FOR PROVIDING ALL FIELD LAYOUT. THE CONTRACTOR SHALL PROVIDE MARKED-UP AS-BUILT PLANS FOR ALL UTILITIES SHOWING CONNECTIONS, BENDS, VALVES, LENGTHS OF LINES AND INVERTS. AS-BUILT PLANS SHALL BE REVIEWED BY THE OWNER AND HIS REPRESENTATIVES BEFORE UTILITIES WILL BE ACCEPTED.

R. CONTRACTOR SHALL BE RESPONSIBLE FOR PROPER INSTALLATION, MONITORING, MAINTENANCE AND REMOVAL OF ALL TEMPORARY EROSION CONTROL MEASURES AND TAKING PRECAUTIONARY STEPS TO AVOID ANY SEDIMENT TRANSFER TO NEIGHBORING SITES OR WATERS OF THE STATE.

S. FOLLOWING ANY WARRANTY PERIOD, THE PROPERTY OWNER SHALL BE RESPONSIBLE FOR MAINTAINING ALL LANDSCAPING, TO INCLUDE GRASS AND MULCH, IN GOOD, HEALTHY CONDITION SO AS TO PRESENT A NEAT AND ORDERLY APPEARANCE.

T. AFTER THE ISSUANCE OF A CERTIFICATE OF OCCUPANCY, THE STORAGE, DISPLAY, OR PARKING OF MOTOR VEHICLES, BOATS, MOBILE HOMES, TRAILERS, OR CONSTRUCTION EQUIPMENT WITHIN LANDSCAPED AREAS, BUFFERS, OR SCREENS, SHOWN AS SUCH ON THE APPROVED LANDSCAPE PLAN, IS EXPRESSLY PROHIBITED AND A VIOLATION OF THE NOTICE OF ACTION.

EPA 2022 CONSTRUCTION GENERAL PERMIT

1. THIS PROJECT IS SUBJECT TO AN EPA 2022 CONSTRUCTION GENERAL PERMIT (CGP).
2. CONTRACTOR SHALL PREPARE AN NOI IN ACCORDANCE WITH THE EPA 2022 CGP.
3. CONTRACTOR SHALL FUNCTION AS AND MEET ALL REQUIREMENTS FOR ELIGIBILITY AS AN OPERATOR AS DEFINED BY THE CGP.
4. CONTRACTOR SHALL BE RESPONSIBLE FOR PROPER INSTALLATION, MONITORING, MAINTENANCE, AND REMOVAL OF ALL TEMPORARY EROSION CONTROL MEASURES AND TAKING PRECAUTIONARY STEPS TO AVOID ANY SEDIMENT TRANSFER TO NEIGHBORING SITES OR WATERS OF THE STATE AS REQUIRED BY THE SUBMITTED SWPPP AND THE CGP.

SYMBOL LEGEND

PROPOSED FEATURES		EXISTING FEATURES
TP1	TEST PIT	*TP1 TEST PIT*
	CATCH BASIN (SQUARE)	*CATCH BASIN (SQUARE)*
	CATCH BASIN (ROUND)	*CATCH BASIN (ROUND)*
	HEADWALL	*HEADWALL*
	FLARED END SECTION	*FLARED END SECTION*
	STONE APRON	*STONE APRON*
	DRAIN MANHOLE (DMH)	*DRAIN MANHOLE (DMH)*
C/O	DRAINAGE CLEAN OUT	*C/O DRAINAGE CLEAN OUT*
	SANITARY SEWER MANHOLE (SMH)	*SANITARY SEWER MANHOLE (SMH)*
C/O	SANITARY CLEAN OUT	*C/O SANITARY CLEAN OUT*
	HYDRANT	*HYDRANT*
WV	WATER SHUTOFF	*WV WATER SHUTOFF*
	TAPPING SLEEVE & VALVE	*TAPPING SLEEVE & VALVE*
GV	GATE VALVE	*GV GATE VALVE*
	UTILITY POLE	*UTILITY POLE*
	ELECTRICAL MANHOLE	*ELECTRICAL MANHOLE*
	BUILDING MOUNTED LIGHT	*FLOOD LIGHT*
	LIGHT POST	*LIGHT POST*
	BOLLARD	*BOLLARD*
	SINGLE POLE SIGN	*SINGLE POLE SIGN*
+100.5	SPOT ELEVATION	*+ 100.00 SPOT ELEVATION*
	ACCESSIBLE PARKING STALL	*ACCESSIBLE PARKING STALL*
	DRAINAGE FLOW	*DRAINAGE FLOW*
	DECIDUOUS TREE	*DECIDUOUS TREE*
	CONIFEROUS TREE	*CONIFEROUS TREE*

LINETYPE LEGEND

PROPOSED FEATURES		EXISTING FEATURES
100	MAJOR CONTOUR	*100 MAJOR CONTOUR*
98	MINOR CONTOUR	*98 MINOR CONTOUR*
	EDGE OF RIVER	*EDGE OF RIVER*
	PROPERTY LINE	*PROPERTY LINE*
	SETBACK	*SETBACK*
	EASEMENT	*EASEMENT*
LOC	LIMIT OF CONSTRUCTION	*LIMIT OF CONSTRUCTION*
LOD	LIMIT OF DISTURBANCE	*LIMIT OF DISTURBANCE*
SF	SILT FENCE	*SILT FENCE*
	DEMOLITION WORK	*DEMOLITION WORK*
	CENTERLINE	*CENTERLINE*
	EDGE OF PAVEMENT	*EDGE OF PAVEMENT*
	EDGE OF GRAVEL	*EDGE OF GRAVEL*
	EDGE OF CONCRETE	*EDGE OF CONCRETE*
	CURB	*CURB*
	FENCE (CHAIN LINK)	*FENCE (CHAIN LINK)*
	FENCE (WOODEN)	*FENCE (WOODEN)*
	GUARD RAIL	*GUARD RAIL*
	TREE LINE	*TREE LINE*
		EDGE OF WETLANDS - DELINEATED
		EDGE OF WETLANDS - APPROXIMATE
	STONE WALL	*STONE WALL*
S	SANITARY SEWER	*S SANITARY SEWER*
FM	SEWER FORCEMAIN	*FM SEWER FORCEMAIN*
SD	STORM LINE	*SD STORM LINE*
		(ST) STORM LINE APPROX.
UD	UNDER DRAIN	*UD UNDER DRAIN*
	DITCH/SWALE	*DITCH/SWALE*
UGE	UNDERGROUND ELECTRIC	*UGE UNDERGROUND ELECTRIC*
OHE	OVERHEAD ELECTRIC	*OHE OVERHEAD ELECTRIC*
SL	ELECTRICAL SITE LIGHTING	*SL ELECTRICAL SITE LIGHTING*
W	WATER LINE	*W WATER LINE*
GAS	GAS LINE	*GAS GAS LINE APPROX.*

WILDLIFE PROTECTION NOTES

1. ALL OBSERVATIONS OF THREATENED OR ENDANGERED SPECIES SHALL BE REPORTED IMMEDIATELY TO THE NEW HAMPSHIRE FISH AND GAME DEPARTMENT NONGAME AND ENDANGERED WILDLIFE ENVIRONMENTAL REVIEW PROGRAM BY PHONE AT 603-271-2461 AND BY EMAIL AT NHFGREVIEW@WILDLIFE.NH.GOV. EMAIL SUBJECT LINE: NHB21-3736, 402 MOUNT SUPPORT RD. HOUSING, WILDLIFE SPECIES OBSERVATION.
2. PHOTOGRAPHS OF THE OBSERVED SPECIES AND NEARBY ELEMENTS OF HABITAT OR AREAS OF LAND DISTURBANCE SHALL BE PROVIDED TO NHF&G IN DIGITAL FORMAT AT THE ABOVE EMAIL ADDRESS FOR VERIFICATION AS FEASIBLE;
3. IN THE EVENT A THREATENED OR ENDANGERED SPECIES IS OBSERVED ON THE PROJECT SITE DURING THE TERM OF THE PERMIT, THE SPECIES SHALL NOT BE DISTURBED, HANDLED, OR HARMED IN ANY WAY PRIOR TO CONSULTATION WITH NHF&G AND IMPLEMENTATION OF CORRECTIVE ACTIONS RECOMMENDED BY NHF&G, IF ANY, TO ASSURE THE PROJECT DOES NOT APPRECIABLY JEOPARDIZE THE CONTINUED EXISTENCE OF THREATENED AND ENDANGERED SPECIES AS DEFINED IN FIS 1002.04
4. THE NHF&G, INCLUDING ITS EMPLOYEES AND AUTHORIZED AGENTS, SHALL HAVE ACCESS TO THE PROPERTY DURING THE TERM OF THE PERMIT.

STATE OF NEW HAMPSHIRE
NICHOLAS A. FIORE
No. 13286
LICENSED
PROFESSIONAL ENGINEER
Stamp

No.	Description	Date
1	REVISED FOR AOT PER RFI DATED 3/25/22	6/01/22

ENGINEERING VENTURES PC
208 Flynn Avenue, Suite 2A, Burlington, VT 05401 • 802-863-6225
85 Mechanic Street, Suite E2-3, Lebanon, NH 03766 • 603-442-9333
414 Union Street, Schenectady, NY 12305 • 518-630-9614
www.engineeringventures.com

SAXON PARTNERS
25 RECREATION PARK DRIVE, SUITE 204
HINGHAM, MA 02043
781-875-3300
802-343-5330

Sheet Title: SITE LEGEND AND NOTES

Project Title: MAREK 2
402 MT SUPPORT ROAD
CITY OF LEBANON, GRAFTON COUNTY, NEW HAMPSHIRE

EV Project #	22715
Drawn By:	JWF
Checked By:	NAF
Scale:	NOT TO SCALE
Date:	09/11/2023

C0.1

PLOTTED: 9/9/2023 8:40 AM
S:\PROJECTS\0-2022\22715 NH 402 MT SUPPORT - SAXON\DWG\SHEET FILES\22715 C0.1 SITE LEGEND AND NOTES.DWG

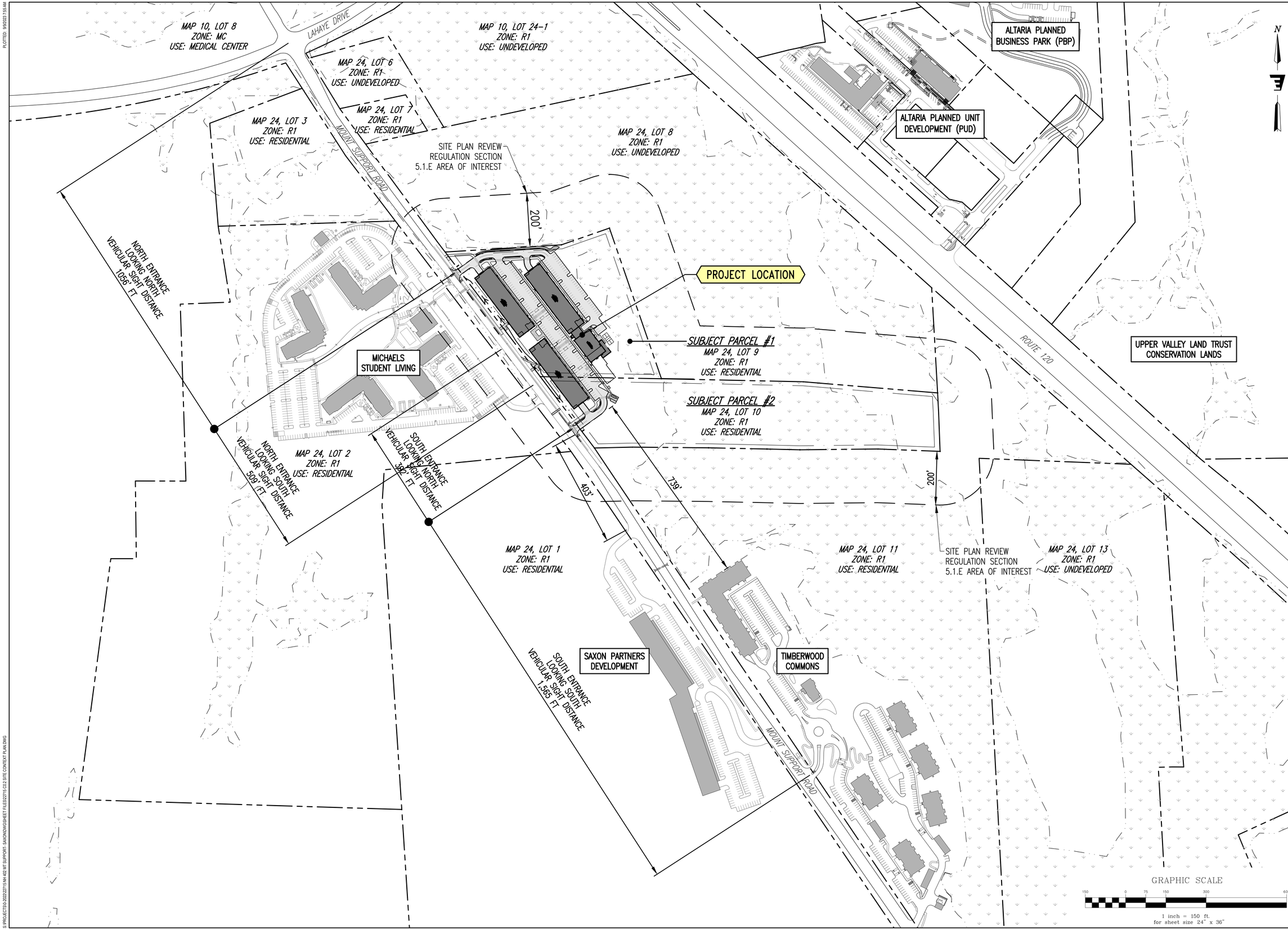

STATE OF NEW HAMPSHIRE
NICHOLAS A. FIORE
No. 13286
LICENSED
PROFESSIONAL ENGINEER
Stamp

No.	Description	Date

ENGINEERING VENTURES PC
208 Flynn Avenue, Suite 2A, Burlington, VT 05401 • 802-863-6225
85 Mechanic Street, Suite E2-3, Lebanon, NH 03766 • 603-442-9333
414 Union Street, Schenectady, NY 12305 • 518-630-9614
www.engineeringventures.com

SAXON PARTNERS
25 RECREATION PARK DRIVE, SUITE 204
HINGHAM, MA 02043
781-875-3300
802-343-6330

Sheet Title: SITE CONTEXT EXHIBIT

Project Title: MAREK 2
402 MT SUPPORT ROAD
CITY OF LEBANON, GRAFTON COUNTY, NEW HAMPSHIRE

EV Project #	22715
Drawn By:	NAF
Checked By:	NAF
Scale:	1" = 150'
Date:	09/11/2023

C0.2

PLOTTED: 9/9/2023 7:55 AM

S:\PROJECTS\0-2022\22715 NH 402 MT SUPPORT - SAXON\DWG\SHEET FILES\22715 C0.2 SITE CONTEXT PLAN.DWG

PROJECT PHASING

PHASE 1

- CONSTRUCTION SCHEDULE
  - DECEMBER 1, 2023 TO DECEMBER 31, 2025
  - START AND END DATES ARE ESTIMATES AND MAY VARY
- SECURE BUILDING PERMIT PRIOR TO DECEMBER 1, 2025
- MOBILIZE ON SITE, INSTALL CONSTRUCTION ENTRANCE
- BASE LAYOUT, FLAG FOR CLEARING AND WETLANDS DELINEATION
- INSTALL EROSION CONTROL MEASURES
- CLEAR AND GRUB WOODED AREAS
- ROUGH GRADE SITE
- CONSTRUCT FOLLOWING SITE IMPROVEMENTS:
  - MASS GRADING FOR ALL SITE IMPROVEMENTS INCLUDING MAKING OTHER BUILDING SITES PAD READY.
  - INFRASTRUCTURE FOR SEWER, WATER, STORM DRAINAGE
  - WIRE UTILITIES (PHONE/CABLE/ELECTRIC).
  - RETAINING WALLS
  - SELECTED ROADWAY/PARKING GRAVELS
  - CONSTRUCT AMENITY BUILDING
  - CONSTRUCT SIDEWALKS AND PATIO ASSOCIATED WITH AMENITY BUILDING AND PUBLIC R.O.W.
  - DUMPSTER PAD AND ENCLOSURE
  - BASE COAT PAVING
  - LANDSCAPING WITHIN PHASE 1 AND EXCLUSIVE OF OTHER PHASE AREAS
- IF REQUIRED, SECURITY FOR REMAIN PHASE 1 WORK TO BE POSTED BY DECEMBER 31, 2025 OR PRIOR TO ISSUANCE OF CERTIFICATE OF OCCUPANCY.
- WORK FOR WHICH SECURITY HAS BEEN POSTED SHALL BE COMPLETE BY JUNE 30, 2026 OR SIX(6) MONTHS AFTER POSTING OF SECURITY, WHICHEVER COMES FIRST.

PHASE 2

- CONSTRUCTION SCHEDULE
  - APRIL 1, 2024 TO APRIL 30, 2026
  - START AND END DATES ARE ESTIMATES AND MAY VARY
- SECURE BUILDING PERMIT PRIOR TO DECEMBER 1, 2025
- CONSTRUCT FOLLOWING SITE IMPROVEMENTS
  - BUILDING 2
  - BUILDING 2 GARAGE DRIVEWAY UP TO BASE COAT PAVING
  - SIDEWALKS ASSOCIATED WITH BUILDING 2
  - LANDSCAPING WITHIN PHASE 2
- IF REQUIRED, SECURITY FOR REMAINING PHASE 2 WORK TO BE POSTED BY APRIL 30, 2026 OR PRIOR TO ISSUANCE OF CERTIFICATE OF OCCUPANCY.
- WORK FOR WHICH SECURITY HAS BEEN POSTED SHALL BE COMPLETE BY OCTOBER 31, 2026 OR SIX(6) MONTHS AFTER POSTING OF SECURITY, WHICHEVER COMES FIRST.

PHASE 3

- CONSTRUCTION SCHEDULE
  - JULY 1, 2024 TO JUNE 30, 2026
  - START AND END DATES ARE ESTIMATES AND MAY VARY
- SECURE BUILDING PERMIT PRIOR TO DECEMBER 1, 2025
- CONSTRUCT FOLLOWING SITE IMPROVEMENTS
  - BUILDING 3
  - BUILDING 3 GARAGE DRIVEWAY
  - SIDEWALKS ASSOCIATED WITH BUILDING 3
  - LANDSCAPING WITHIN PHASE 3
- IF REQUIRED, SECURITY FOR REMAINING PHASE 3 WORK TO BE POSTED BY JUNE 30, 2026 OR PRIOR TO ISSUANCE OF CERTIFICATE OF OCCUPANCY.
- WORK FOR WHICH SECURITY HAS BEEN POSTED SHALL BE COMPLETE BY DECEMBER 31, 2026 OR SIX(6) MONTHS AFTER POSTING OF SECURITY, WHICHEVER COMES FIRST.

PHASE 4

- CONSTRUCTION SCHEDULE
  - OCTOBER 1, 2024 TO SEPTEMBER 31, 2026
  - START AND END DATES ARE ESTIMATES AND MAY VARY
  - SOME ITEMS MAY BE COMPLETED AS PARTS OF EARLIER PHASES
- SECURE BUILDING PERMIT PRIOR TO OCTOBER 1, 2025
- CONSTRUCT FOLLOWING SITE IMPROVEMENTS
  - BUILDING 1
  - BUILDING 1 GARAGE DRIVEWAY
  - SIDEWALKS ASSOCIATED WITH BUILDING 1
  - LANDSCAPING WITHIN PHASE 4
  - FENCING AND GUARD RAILS ALL PHASES
  - SITE FUNATURE AND AMENITIES ALL PHASES
  - TOP COAT ASPHALT ALL PHASES
  - SIGNAGE AND PAVEMENT MARKINGS ALL PHASES
- IF REQUIRED, SECURITY FOR REMAINING PHASE 4 WORK TO BE POSTED BY SEPTEMBER 31, 2026 OR PRIOR TO ISSUANCE OF CERTIFICATE OF OCCUPANCY.
- WORK FOR WHICH SECURITY HAS BEEN POSTED SHALL BE COMPLETE BY MARCH 31, 2027 OR SIX(6) MONTHS AFTER POSTING OF SECURITY, WHICHEVER COMES FIRST.

STATE OF NEW HAMPSHIRE
JOSHUA A. FIORE
No. 13286
LICENSED
PROFESSIONAL ENGINEER
Stamp

No.	Description	Date

ENGINEERING VENTURES PC
208 Flynn Avenue, Suite 2A, Burlington, VT 05401 • 802-863-6225
85 Mechanic Street, Suite E2-3, Lebanon, NH 03766 • 603-442-9333
414 Union Street, Schenectady, NY 12305 • 518-630-9614
www.engineeringventures.com

SPNH LEBANON NORTH, LLC
c/o SAXON PARTNERS
25 RECREATION PARK DRIVE, SUITE 204
HINGHAM, MA 02043
781-875-3300

Sheet Title: PROJECT PHASING PLAN

Project Title: MAREK 2
392 & 402 MT SUPPORT ROAD
CITY OF LEBANON, GRAFTON COUNTY, NEW HAMPSHIRE

EV Project #	22715
Drawn By:	JWF
Checked By:	NAF
Scale:	1" = 40'
Date:	09/11/2023

C0.3

PLOTTED: 9/8/2023 5:52 PM

S:\PROJECTS\0-2022\22715 NH 402 MT SUPPORT- SAXON\DWG\SHEET FILES\22715 C0.3 PROJECT PHASING PLAN.DWG

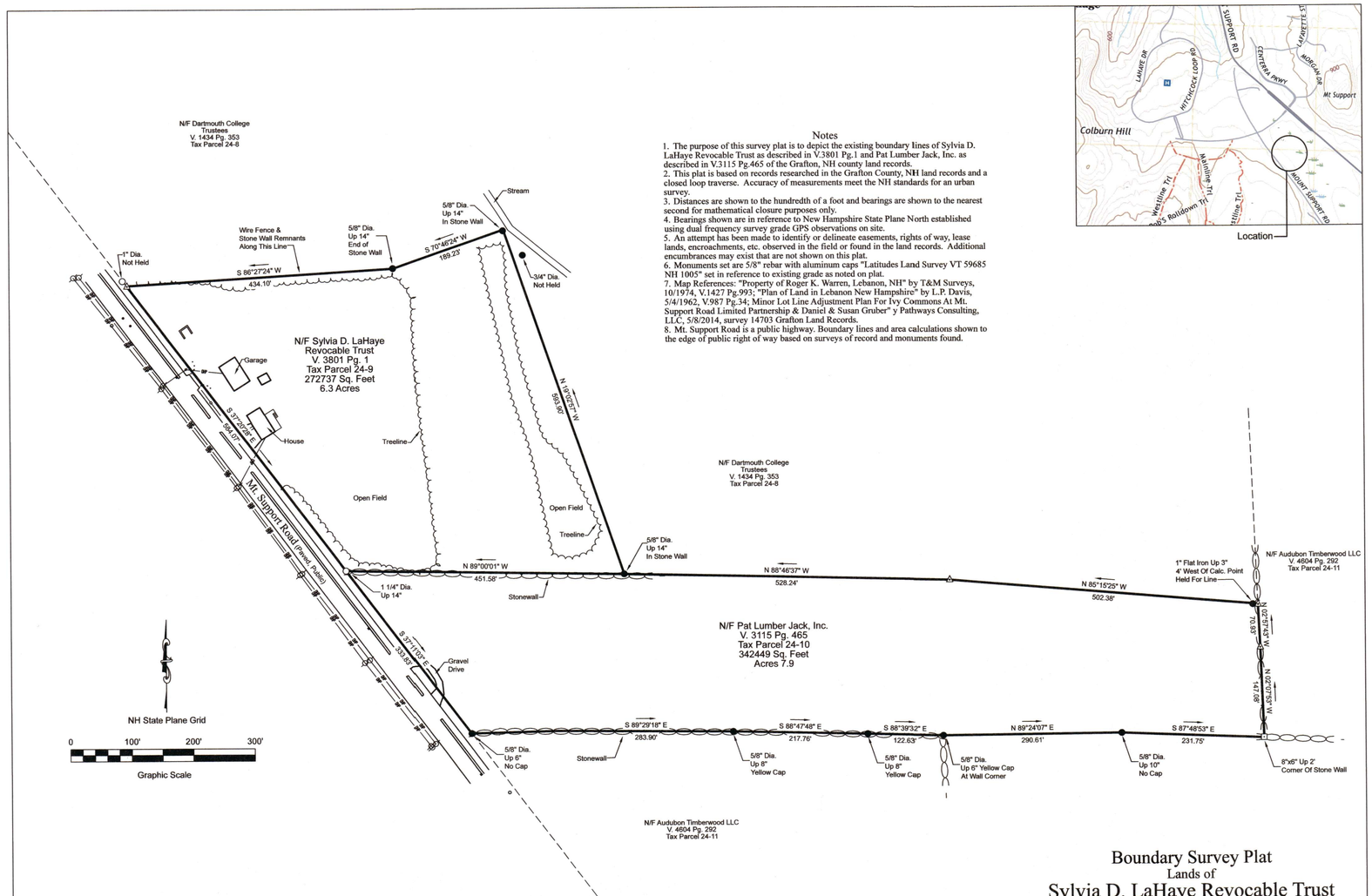

Notes

1. The purpose of this survey plat is to depict the existing boundary lines of Sylvia D. LaHaye Revocable Trust as described in V.3801 Pg.1 and Pat Lumber Jack, Inc. as described in V.3115 Pg.465 of the Grafton, NH county land records.
2. This plat is based on records researched in the Grafton County, NH land records and a closed loop traverse. Accuracy of measurements meet the NH standards for an urban survey.
3. Distances are shown to the hundredth of a foot and bearings are shown to the nearest second for mathematical closure purposes only.
4. Bearings shown are in reference to New Hampshire State Plane North established using dual frequency survey grade GPS observations on site.
5. An attempt has been made to identify or delineate easements, rights of way, lease lands, encroachments, etc. observed in the field or found in the land records. Additional encumbrances may exist that are not shown on this plat.
6. Monuments set are 5/8" rebar with aluminum caps "Latitudes Land Survey VT 59685 NH 1005" set in reference to existing grade as noted on plat.
7. Map References: "Property of Roger K. Warren, Lebanon, NH" by T&M Surveys, 10/1974, V.1427 Pg.993; "Plan of Land in Lebanon New Hampshire" by L.P. Davis, 5/4/1962, V.987 Pg.34; Minor Lot Line Adjustment Plan For Ivy Commons At Mt. Support Road Limited Partnership & Daniel & Susan Gruber" y Pathways Consulting, LLC, 5/8/2014, survey 14703 Grafton Land Records.
8. Mt. Support Road is a public highway. Boundary lines and area calculations shown to the edge of public right of way based on surveys of record and monuments found.

Legend

- Calculated Point
- Stone Bound
- Rebar Found
- Boundary Line
- Not Surveyed
- Pipe Found

This plat is my faithfull representation of record evidence, parol evidence, physical site conditions at the time of survey and all other spicific evidence refered to in the notes section and on the plat herein. This plat meets the requirments of NH statute 310-A:67

Nathan O. Yager NH LLS # 1005 Date 11/5/2021

STATE OF NEW HAMPSHIRE LICENSED LAND SURVEYOR No. 1005 NATHAN O. YAGER

Boundary Survey Plat

Lands of

Sylvia D. LaHaye Revocable Trust

402 Mt. Support Road, Lebanon, New Hampshire

&

Pat Lumber Jack, Inc.

392 Mt. Support Road, Lebanon, New Hampshire

LATITUDES Land Surveying
129B Spruce Street, Burlington, VT
latitudeslandsurveying.com

Date 11/5/2021
Scale 1"=100'
Project #210515

SURVEY NOTES

1. THE PURPOSE OF THIS PLAN IS TO DEPICT THE EXISTING CONDITIONS OF THIS PROPERTY.
2. THE PROPERTY LINES SHOWN HERE ARE BASED ON A BOUNDARY SURVEY ENTITLED "BOUNDARY SURVEY PLAT, LANDS OF SYLVIA D. LAHAYE REVOCABLE TRUST & PAT LUMBER JACK INC.", AS PREPARED BY LATITUDES LAND SURVEYING, DATED 11/05/2021.
3. TOPOGRAPHIC AND PHYSICAL FEATURE INFORMATION SHOWN ON THIS PLAN ARE BASED UPON AN ACTUAL ON-THE-GROUND INSTRUMENT SURVEY PERFORMED BY NATE YAGER LLS OF LATITUDES LAND SURVEYING IN NOVEMBER OF 2019.
4. THE LOCATIONS OF EXISTING UNDERGROUND UTILITIES SHOWN ON THIS PLAN ARE BASED ON FIELD OBSERVATIONS AND INFORMATION OF RECORD. THEY ARE NOT WARRANTED TO BE EXACTLY LOCATED NOR IS IT WARRANTED THAT ALL UNDERGROUND UTILITIES OR OTHER STRUCTURES ARE SHOWN ON THIS PLAN.
5. HORIZONTAL DATUM IS NEW HAMPSHIRE STATE PLAN, N.A.D. 1983.
6. CONTOURS AND SPOT ELEVATIONS SHOWN ARE BASED UPON N.A.V.D. 1988.

PROPERTY NOTES

1. PARCELS 24-9 AND 24-10 WILL BE MERGED FOLLOWING PERMIT APPROVALS AND LAND OWNERSHIP TRANSFER

WETLAND MAPPING NOTES

1. AUDRA L. KLUMB, NH CERTIFIED WETLAND SCIENTIST #222 OF A&D KLUMB ENVIRONMENTAL, LLC, WEBSTER, NH, PERFORMED THE WETLAND MAPPING FOR THIS SITE ON SEPTEMBER 4, 2019 AND OCTOBER 9, 2019 ACCORDING TO THE TECHNICAL CRITERIA OF THE US ARMY CORPS OF ENGINEERS DELINEATION MANUAL (TECHNICAL REPORT Y-87-1, JANUARY 1987), THE REGIONAL SUPPLEMENT TO THE CORPS OF ENGINEERS WETLAND DELINEATION MANUAL: NORTHCENTRAL AND NORTHEAST REGION, VERSION 2.0 (JANUARY 2012), AND NH STATE STATUTE RSA482-A:2 X.
2. WETLAND FLAGS WERE LOCATED IN THE FIELD UTILIZING TRADITIONAL SURVEY METHODS.
3. THE CITY OF LEBANON NATURAL RECOURSES INVENTORY CLASSIFIES WETLANDS ON THE SUBJECT PROPERTIES AS MEDIUM-LOW VALUE.

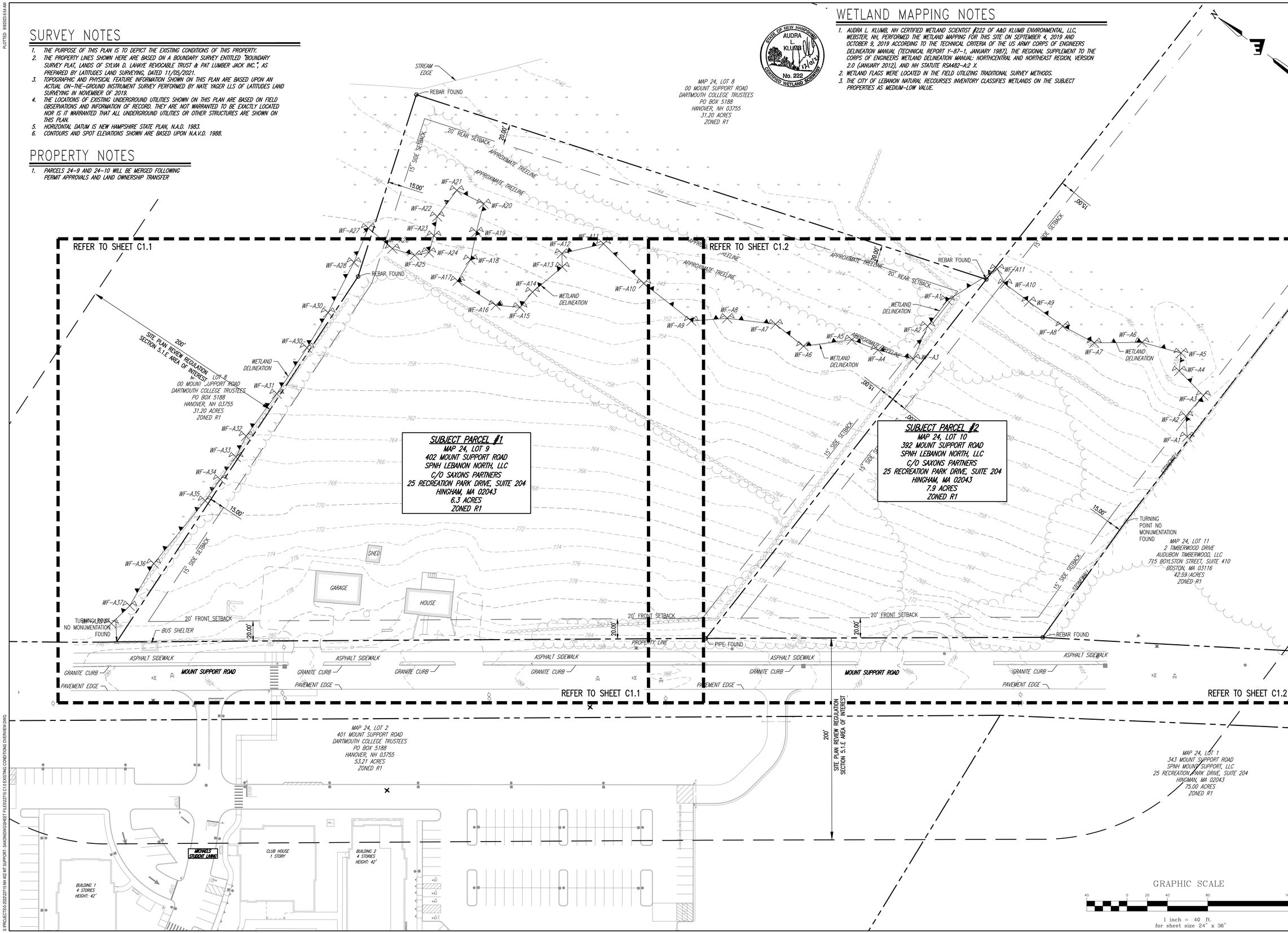

STATE OF NEW HAMPSHIRE
NICHOLAS A. FIORE
No. 13286
LICENSED
PROFESSIONAL ENGINEER
Stamp

No.	Description	Date

ENGINEERING VENTURES PC
208 Flynn Avenue, Suite 2A, Burlington, VT 05401 • 802-863-6225
85 Mechanic Street, Suite E2-3, Lebanon, NH 03766 • 603-442-9333
414 Union Street, Schenectady, NY 12305 • 518-630-9614
www.engineeringventures.com

SAXON PARTNERS
25 RECREATION PARK DRIVE, SUITE 204
HINGHAM, MA 02043
781-875-3300
802-343-6330

Sheet Title: EXISTING CONDITIONS OVERVIEW

Project Title: MAREK 2
402 MT SUPPORT ROAD
CITY OF LEBANON, GRAFTON COUNTY, NEW HAMPSHIRE

EV Project #	22715
Drawn By:	JWF
Checked By:	NAF
Scale:	1" = 40'
Date:	09/11/2023

C1.0

PLOTTED: 9/8/2023 8:54 AM

S:\PROJECTS\0-2022\2715 NH 402 MT SUPPORT - SAXON\DWG\SHEET FILES\22715-C1.0 EXISTING CONDITIONS OVERVIEW.DWG

DEMOLITION NOTES

1. ALL DEMOLITION ITEMS FROM THE DEMOLITION, UNLESS NOTED BY THE OWNER TO BE STORED OR REUSED, BECOME THE PROPERTY OF THE CONTRACTOR AND SHALL BE PROMPTLY REMOVED FROM THE SITE. SOIL DISPOSAL SHALL BE AS DIRECTED BY OWNER.
2. ALL ADJACENT FACILITIES AND STRUCTURES NOT INDICATED AS INCLUDED IN THE SCOPE OF WORK, SHALL BE PROTECTED FROM DAMAGE DURING CONSTRUCTION. ALL ADJACENT FACILITIES OR STRUCTURES DAMAGED DURING CONSTRUCTION SHALL BE REPAIRED OR REPLACED TO PRE-CONSTRUCTION CONDITION OR BETTER.
3. TAKE ALL PRECAUTIONS NECESSARY TO PROVIDE A SAFE WORK AREA DURING DEMOLITION PROCEDURES.
4. PRIOR TO DEMOLITION, HAND EXCAVATE ANY UNDERGROUND UTILITIES. NOTIFY THE OWNER IF ANY OTHER UTILITIES NOT NOTED ON THE DRAWINGS ARE FOUND.
5. CARE SHALL BE TAKEN NOT TO DAMAGE OR DISTURB ANY TREES NOT CALLED OUT FOR REMOVAL DURING CONSTRUCTION.
6. THE FOLLOWING ITEMS SHALL BE DEMOLISHED AND REMOVED FROM THE SITE:

- **X1** SAWCUT EXISTING ASHPALT PAVING, REMOVE AND PROPERLY DISPOSED OF EXISTING ASPHALT
- **X2** REMOVE EXISTING GRANITE CURB AND RE-USE AS POSSIBLE IN ROADWAY AREAS BEING MODIFIED BY THIS PROJECT
- **X3** REMOVE EXISTING GRAVEL DRIVE/PARKING AREAS
- **X4** CONCRETE WASTE BLOCK STRUCTURE TO BE REMOVED AND PROPERLY DISPOSED OF
- **X5** WOOD FRAMED BUILDINGS, FOUNDATION, DECKS, RAMPS, ETC. TO BE REMOVED AND PROPERLY DISPOSED OF
- **X6** WOOD FENCE TO BE REMOVED AND PROPERLY DISPOSED OF
- **X7** OVERHEAD UTILITY LINES TO BE REMOVED AND PROPERLY DISPOSED OF. COORDINATE REMOVAL WITH LOCAL UTILITY SERVICE PROVIDER
- **X8** ABOVEGROUND PROPANE TANK AND SUPPLY LINES TO BE REMOVED AND PROPERLY DISPOSED OF. COORDINATE REMOVAL WITH LOCAL UTILITY SERVICE PROVIDER
- **X9** CONCRETE LID, ASSUMED TO BE A COVER FOR A DUG WELL. WELL, COVER, AND SUPPLY LINES TO BE REMOVED AND PROPERLY DISPOSED OF
- **X10** STONE WALL TO BE REMOVED, RE-USE STONES ON-SITE AS FILL IN NON-STRUCTURAL/NON-SELECT FILL AREAS
- **X12** EXISTING WOODED AREA TO BE CLEARED AND GRUBBED, STUMPS TO BE REMOVED AND PROPERLY DISPOSED OF OFF-SITE.

SURVEY NOTES

1. *THE PURPOSE OF THIS PLAN IS TO DEPICT THE EXISTING CONDITIONS OF THIS PROPERTY.*
2. *THE PROPERTY LINES SHOWN HERE ARE BASED ON A BOUNDARY SURVEY ENTITLED "BOUNDARY SURVEY PLAT, LANDS OF SYLVIA D. LAHAYE REVOCABLE TRUST & PAT LUMBER JACK INC.", AS PREPARED BY LATITUDES LAND SURVEYING, DATED 11/05/2021.*
3. *TOPOGRAPHIC AND PHYSICAL FEATURE INFORMATION SHOWN ON THIS PLAN ARE BASED UPON AN ACTUAL ON-THE-GROUND INSTRUMENT SURVEY PERFORMED BY WATE YAGER LLS OF LATITUDES LAND SURVEYING IN NOVEMBER OF 2019.*
4. *THE LOCATIONS OF EXISTING UNDERGROUND UTILITIES SHOWN ON THIS PLAN ARE BASED ON FIELD OBSERVATIONS AND INFORMATION OF RECORD. THEY ARE NOT WARRANTED TO BE EXACTLY LOCATED NOR IS IT WARRANTED THAT ALL UNDERGROUND UTILITIES OR OTHER STRUCTURES ARE SHOWN ON THIS PLAN.*
5. *HORIZONTAL DATUM IS NEW HAMPSHIRE STATE PLAN, N.A.D. 1983.*
6. *CONTOURS AND SPOT ELEVATIONS SHOWN ARE BASED UPON N.A.V.D. 1988.*

WETLAND MAPPING NOTES

1. *AUDRA L. KLUMB, NH CERTIFIED WETLAND SCIENTIST #222 OF A&D KLUMB ENVIRONMENTAL, LLC, WEBSTER, NH, PERFORMED THE WETLAND MAPPING FOR THIS SITE ON SEPTEMBER 28, 2021 ACCORDING TO THE TECHNICAL CRITERIA OF THE US ARMY CORPS OF ENGINEERS DELINEATION MANUAL (TECHNICAL REPORT Y-87-1, JANUARY 1987), THE REGIONAL SUPPLEMENT TO THE CORPS OF ENGINEERS WETLAND DELINEATION MANUAL: NORTHCENTRAL AND NORTHEAST REGION, VERSION 2.0 (JANUARY 2012), AND NH STATUTE RSA482-A:2 X. THE WETLANDS CONTAIN INTERMITTENT STREAMS. THE STREAMBANKS WERE NOT MARKED IN THE FIELD.*
2. *WETLAND FLAGS WERE LOCATED IN THE FIELD UTILIZING TRADITIONAL SURVEY METHODS.*
3. *THE CITY OF LEBANON NATURAL RECOURSES INVENTORY CLASSIFIES WETLANDS ON THE SUBJECT PROPERTIES AS MEDIUM-LOW VALUE.*

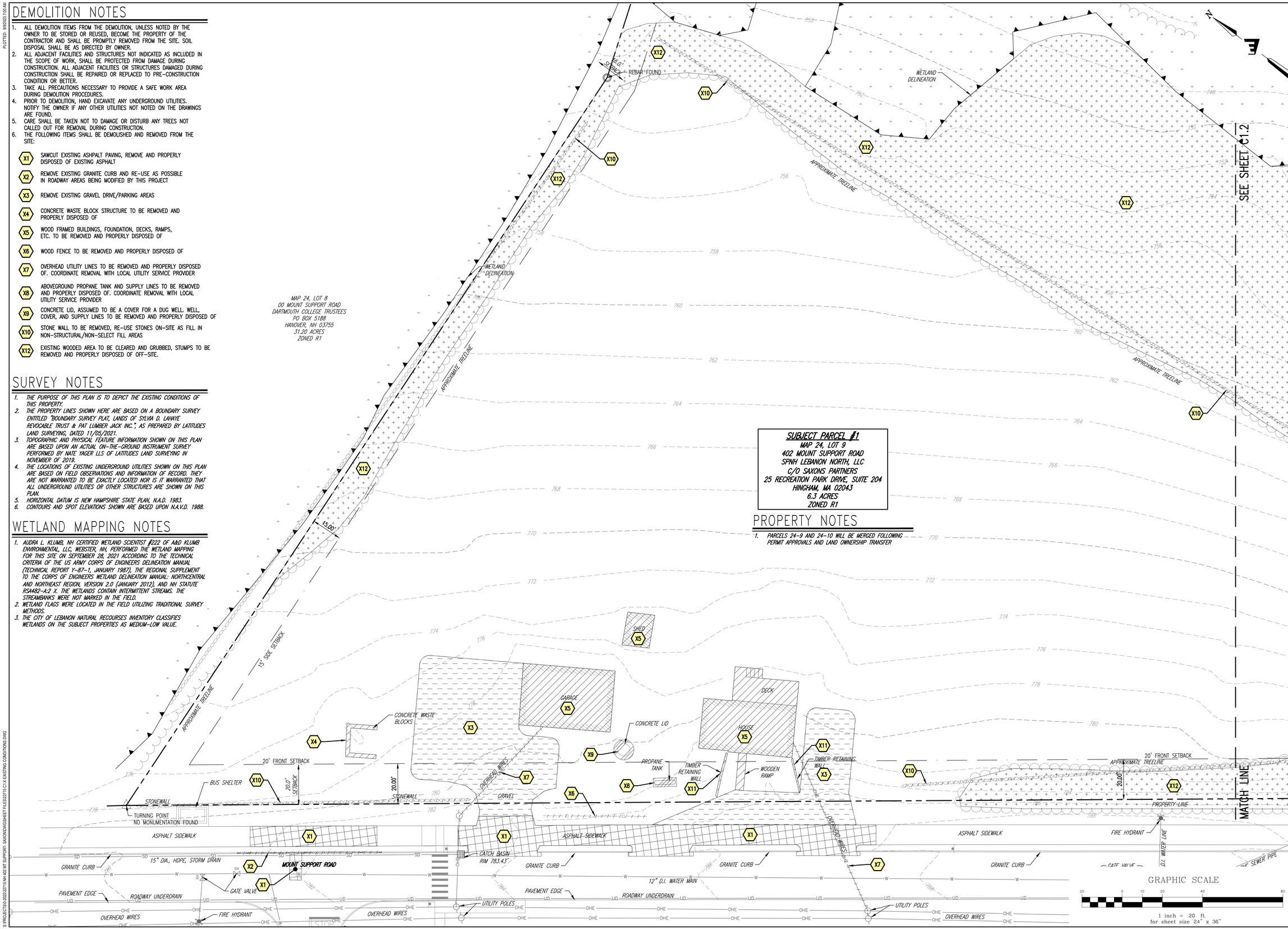

SUBJECT PARCEL #1
MAP 24, LOT 9
402 MOUNT SUPPORT ROAD
SPNH LEBANON NORTH, LLC
C/O SAXONS PARTNERS
25 RECREATION PARK DRIVE, SUITE 204
HINGHAM, MA 02043
6.3 ACRES
ZONED R1

PROPERTY NOTES

1. *PARCELS 24-9 AND 24-10 WILL BE MERGED FOLLOWING PERMIT APPROVALS AND LAND OWNERSHIP TRANSFER*

STATE OF NEW HAMPSHIRE
NICHOLAS A. FIORE
No. 13286
LICENSED
PROFESSIONAL ENGINEER
Stamp

No.	Description	Date

ENGINEERING VENTURES PC
208 Flynn Avenue, Suite 2A, Burlington, VT 05401 • 802-863-6225
85 Mechanic Street, Suite E2-3, Lebanon, NH 03766 • 603-442-9333
414 Union Street, Schenectady, NY 12305 • 518-630-9614
www.engineeringventures.com

SAXON PARTNERS
25 RECREATION PARK DRIVE, SUITE 204
HINGHAM, MA 02043
781-875-3300
802-343-6330

Sheet Title: EXISTING CONDITIONS AND DEMOLITION PLAN (1 OF 2)

Project Title: MAREK 2
402 MT SUPPORT ROAD
CITY OF LEBANON, GRAFTON COUNTY, NEW HAMPSHIRE

EV Project #	22715
Drawn By:	JWF
Checked By:	NAF
Scale:	1" = 20'
Date:	09/11/2023

C1.1

PLOTTED: 9/9/2023 7:00 AM
S:\PROJECTS\0-2022\22715 NH 402 MT SUPPORT - SAXON\DWG\SHEET FILES\22715 C1.X EXISTING CONDITIONS.DWG

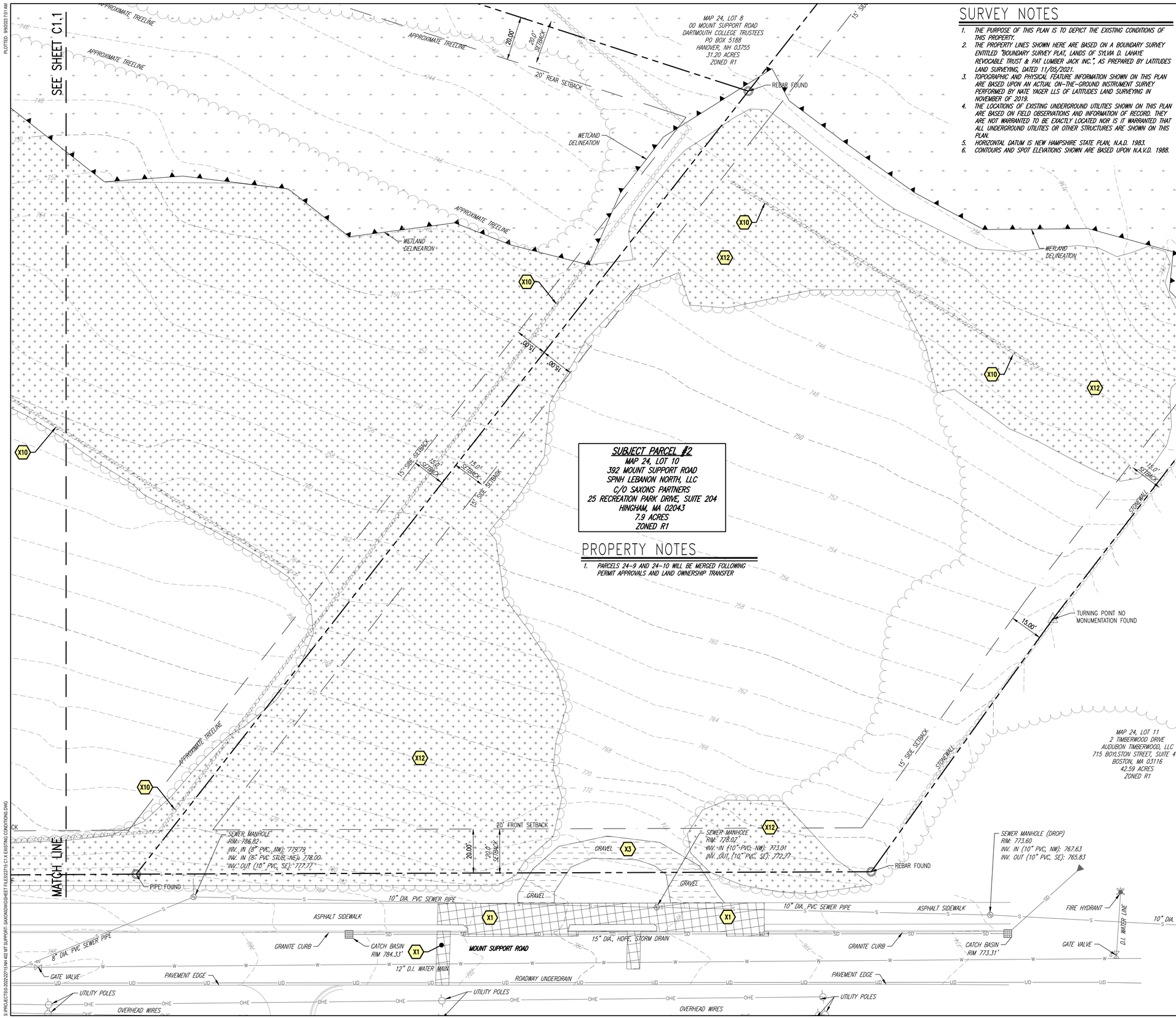

SURVEY NOTES

1. THE PURPOSE OF THIS PLAN IS TO DEPICT THE EXISTING CONDITIONS OF THIS PROPERTY.
2. THE PROPERTY LINES SHOWN HERE ARE BASED ON A BOUNDARY SURVEY ENTITLED "BOUNDARY SURVEY PLAT, LANDS OF SYLVIA D. LAHAYE REVOCABLE TRUST & PAT LUMBER JACK INC.", AS PREPARED BY LATITUDES LAND SURVEYING, DATED 11/05/2021.
3. TOPOGRAPHIC AND PHYSICAL FEATURE INFORMATION SHOWN ON THIS PLAN ARE BASED UPON AN ACTUAL ON-THE-GROUND INSTRUMENT SURVEY PERFORMED BY NATE YAGER LLS OF LATITUDES LAND SURVEYING IN NOVEMBER OF 2019.
4. THE LOCATIONS OF EXISTING UNDERGROUND UTILITIES SHOWN ON THIS PLAN ARE BASED ON FIELD OBSERVATIONS AND INFORMATION OF RECORD. THEY ARE NOT WARRANTED TO BE EXACTLY LOCATED NOR IS IT WARRANTED THAT ALL UNDERGROUND UTILITIES OR OTHER STRUCTURES ARE SHOWN ON THIS PLAN.
5. HORIZONTAL DATUM IS NEW HAMPSHIRE STATE PLAN, N.A.D. 1983.
6. CONTOURS AND SPOT ELEVATIONS SHOWN ARE BASED UPON N.A.V.D. 1988.

WETLAND MAPPING NOTES

1. AUDRA L. KLUMB, NH CERTIFIED WETLAND SCIENTIST #222 OF A&D KLUMB ENVIRONMENTAL, LLC, WEBSTER, NH, PERFORMED THE WETLAND MAPPING FOR THIS SITE ON SEPTEMBER 28, 2021 ACCORDING TO THE TECHNICAL CRITERIA OF THE US ARMY CORPS OF ENGINEERS DELINEATION MANUAL (TECHNICAL REPORT Y-87-1, JANUARY 1987), THE REGIONAL SUPPLEMENT TO THE CORPS OF ENGINEERS WETLAND DELINEATION MANUAL: NORTHCENTRAL AND NORTHEAST REGION, VERSION 2.0 (JANUARY 2012), AND NH STATUTE RSA482-A:2 X. THE WETLANDS CONTAIN INTERMITTENT STREAMS. THE STREAMBANKS WERE NOT MARKED IN THE FIELD.
2. WETLAND FLAGS WERE LOCATED IN THE FIELD UTILIZING TRADITIONAL SURVEY METHODS.
3. THE CITY OF LEBANON NATURAL RECOURSES INVENTORY CLASSIFIES WETLANDS ON THE SUBJECT PROPERTIES AS MEDIUM-LOW VALUE.

PROPERTY NOTES

1. PARCELS 24-9 AND 24-10 WILL BE MERGED FOLLOWING PERMIT APPROVALS AND LAND OWNERSHIP TRANSFER

DEMOLITION NOTES

1. ALL DEMOLITION ITEMS FROM THE DEMOLITION, UNLESS NOTED BY THE OWNER TO BE STORED OR REUSED, BECOME THE PROPERTY OF THE CONTRACTOR AND SHALL BE PROMPTLY REMOVED FROM THE SITE. SOIL DISPOSAL SHALL BE AS DIRECTED BY OWNER.
2. ALL ADJACENT FACILITIES AND STRUCTURES NOT INDICATED AS INCLUDED IN THE SCOPE OF WORK, SHALL BE PROTECTED FROM DAMAGE DURING CONSTRUCTION. ALL ADJACENT FACILITIES OR STRUCTURES DAMAGED DURING CONSTRUCTION SHALL BE REPAIRED OR REPLACED TO PRE-CONSTRUCTION CONDITION OR BETTER.
3. TAKE ALL PRECAUTIONS NECESSARY TO PROVIDE A SAFE WORK AREA DURING DEMOLITION PROCEDURES.
4. PRIOR TO DEMOLITION, HAND EXCAVATE ANY UNDERGROUND UTILITIES. NOTIFY THE OWNER IF ANY OTHER UTILITIES NOT NOTED ON THE DRAWINGS ARE FOUND.
5. CARE SHALL BE TAKEN NOT TO DAMAGE OR DISTURB ANY TREES NOT CALLED OUT FOR REMOVAL DURING CONSTRUCTION.
6. THE FOLLOWING ITEMS SHALL BE DEMOLISHED AND REMOVED FROM THE SITE:

- X1 — SAWCUT EXISTING ASHPALT PAVING, REMOVE AND PROPERLY DISPOSED OF EXISTING ASPHALT
- X2 — REMOVE EXISTING GRANITE CURB AND RE-USE AS POSSIBLE IN ROADWAY AREAS BEING MODIFIED BY THIS PROJECT
- X3 — REMOVE EXISTING GRAVEL DRIVE/PARKING AREAS
- X4 — CONCRETE WASTE BLOCK STRUCTURE TO BE REMOVED AND PROPERLY DISPOSED OF
- X5 — WOOD FRAMED BUILDINGS, FOUNDATION, DECKS, RAMPS, ETC. TO BE REMOVED AND PROPERLY DISPOSED OF
- X6 — WOOD FENCE TO BE REMOVED AND PROPERLY DISPOSED OF
- X7 — OVERHEAD UTILITY LINES TO BE REMOVED AND PROPERLY DISPOSED OF. COORDINATE REMOVAL WITH LOCAL UTILITY SERVICE PROVIDER
- X8 — ABOVEGROUND PROPANE TANK AND SUPPLY LINES TO BE REMOVED AND PROPERLY DISPOSED OF. COORDINATE REMOVAL WITH LOCAL UTILITY SERVICE PROVIDER
- X9 — CONCRETE LID, ASSUMED TO BE A COVER FOR A DUG WELL. WELL, COVER, AND SUPPLY LINES TO BE REMOVED AND PROPERLY DISPOSED OF
- X10 — STONE WALL TO BE REMOVED, RE-USE STONES ON-SITE AS FILL IN NON-STRUCTURAL/NON-SELECT FILL AREAS
- X12 — EXISTING WOODED AREA TO BE CLEARED AND GRUBBED, STUMPS TO BE REMOVED AND PROPERLY DISPOSED OF OFF-SITE.

STATE OF NEW HAMPSHIRE — NICHOLAS A. FLORE No. 13286 — LICENSED PROFESSIONAL ENGINEER
Stamp

No.	Description	Date

ENGINEERING VENTURES PC
208 Flynn Avenue, Suite 2A, Burlington, VT 05401 • 802-863-6225
85 Mechanic Street, Suite E2-3, Lebanon, NH 03766 • 603-442-9333
414 Union Street, Schenectady, NY 12305 • 518-630-9614
www.engineeringventures.com

SAXON PARTNERS
25 RECREATION PARK DRIVE, SUITE 204
HINGHAM, MA 02043
781-875-3300
802-343-6330

Sheet Title: EXISTING CONDITIONS AND DEMOLITION PLAN (2 OF 2)

Project Title: MAREK 2
402 MT SUPPORT ROAD
CITY OF LEBANON, GRAFTON COUNTY, NEW HAMPSHIRE

EV Project #	22715
Drawn By:	JWF
Checked By:	NAF
Scale:	1" = 20'
Date:	09/11/2023

C1.2

PLOTTED: 9/8/2023 7:01 AM
S:\PROJECTS\0-2022\22715 NH 402 MT SUPPORT- SAXON\DWG\SHEET FILES\22715 C1.X EXISTING CONDITIONS.DWG

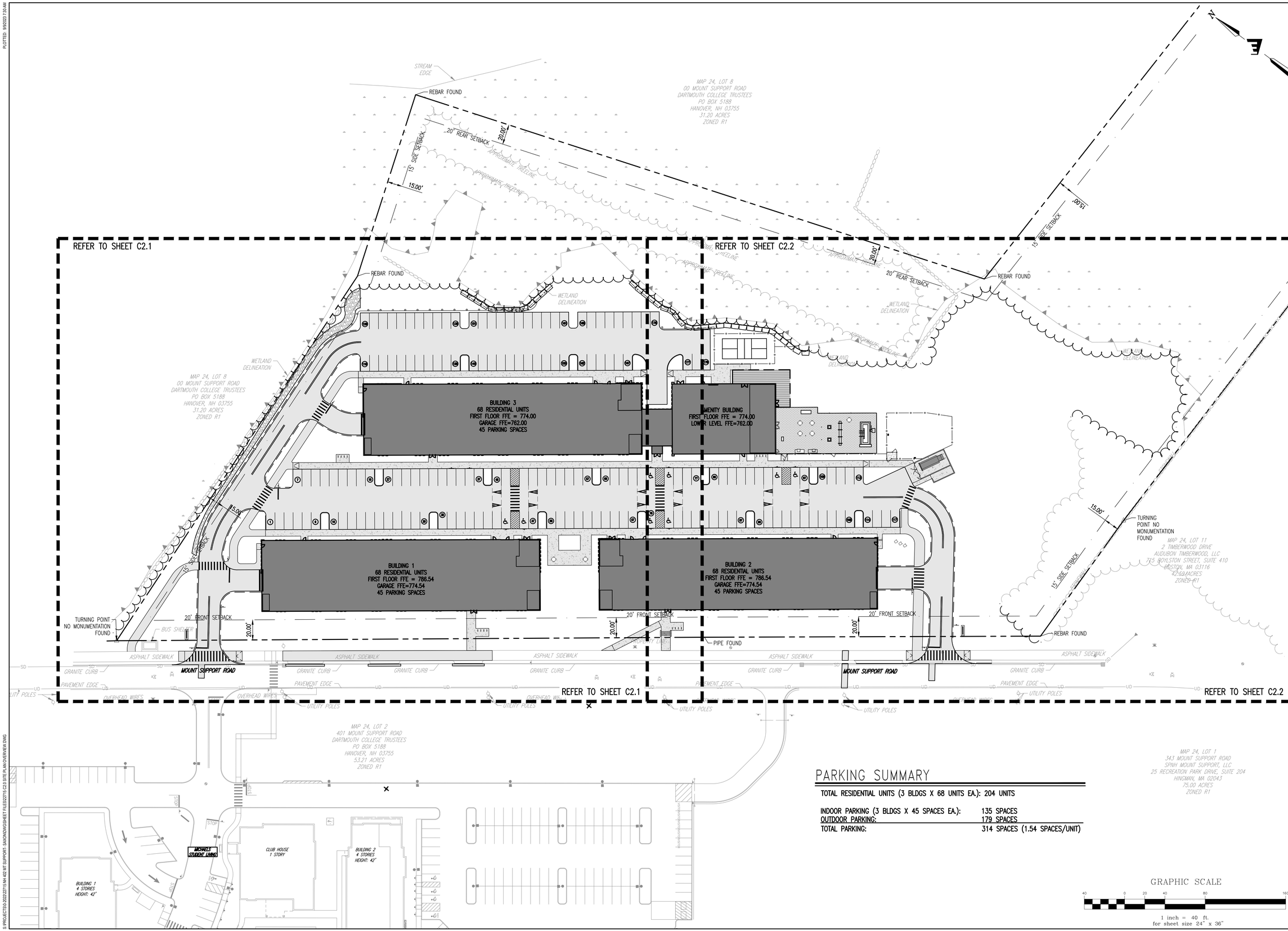

PARKING SUMMARY

TOTAL RESIDENTIAL UNITS (3 BLDGS X 68 UNITS EA.): 204 UNITS

INDOOR PARKING (3 BLDGS X 45 SPACES EA.):	135 SPACES
OUTDOOR PARKING:	179 SPACES
TOTAL PARKING:	314 SPACES (1.54 SPACES/UNIT)

STATE OF NEW HAMPSHIRE
NICHOLAS J. FIORE
No. 13286
LICENSED
PROFESSIONAL ENGINEER
Stamp

No.	Description	Date

ENGINEERING VENTURES PC
208 Flynn Avenue, Suite 2A, Burlington, VT 05401 • 802-863-6225
85 Mechanic Street, Suite E2-3, Lebanon, NH 03766 • 603-442-9333
414 Union Street, Schenectady, NY 12305 • 518-630-9614
www.engineeringventures.com

SAXON PARTNERS
25 RECREATION PARK DRIVE, SUITE 204
HINGHAM, MA 02043
781-875-3300
802-343-6330

Sheet Title: SITE PLAN OVERVIEW

Project Title: MAREK 2
402 MT SUPPORT ROAD
CITY OF LEBANON, GRAFTON COUNTY, NEW HAMPSHIRE

EV Project #	22715
Drawn By:	JWF
Checked By:	NAF
Scale:	1" = 40'
Date:	09/11/2023

C2.0

PLOTTED: 9/9/2023 7:30 AM

S:\PROJECTS\0-2022\22715 NH 402 MT SUPPORT - SAXON\DWG\SHEET FILES\22715 C2.0 SITE PLAN OVERVIEW.DWG

PLOTTED: 9/10/2023 12:36 PM

SITE SCHEDULE

- C1 ASPHALT DRIVEWAY/PARING, TYP.
- C2 CONCRETE CURB, TYP.
- C3 CONCRETE SIDEWALK WITH INTEGRAL CURB
- C4 DUMPSTER/RECYCLING ENCLOSURE
- C5 SEGMENTAL CONCRETE BLOCK RETAINING WALL
- C6 ASPHALT PAVED MULTI-USE PATH
- C7 –NOT USED–
- C8 DOG PARK SURROUNDED BY 6' HIGH CHAINLINK FENCE WITH VINYL SLATS
- C9 4' HIGH CHAINLINK FENCE ALONG TOP OF RETAINING WALL OR TOP OF SLOPE (AS SHOWN)
- C10 GUARD RAIL
- C11 ASPHALT PAVED SIDEWALK
- C12 CONCRETE PAVED SIDEWALK
- C13 GRANITE CURB
- C14 REBUILD PORTION OF EXISTING MULTI-USE PATH TO ELIMINATE DRIVEWAY ENTRANCES
- C15 PERMANENT PAVEMENT PATCH
- C16 LIMIT OF TREE CLEARING
- C17 ENTRANCE SIGN WITH DEVELOPMENT NAME AND MANAGER INFORMATION. SIGN IS SUBJECT TO THE REQUIREMENTS OF SECTION 608 OF THE ZONING ORDINANCE
- C18 1:1 SLOPE ARMORED WITH STONE RIP-RAP
- C19 FALL PROTECTION RAILING
- C20 CONCRETE STAIRS WITH HANDRAILS

UTILITIES

FOR DETAILED UTILITY INFORMATION REFER TO THE FOLLOWING SHEETS:

C2.3 – GRADING AND DRAINAGE PLAN (1 OF 2)
C2.4 – GRADING AND DRAINAGE PLAN (2 OF 2)
C2.7 – UTILITIES PLAN
C3.1 – WATER PLAN AND PROFILES
C3.2 – SEWER PLAN AND PROFILES

LANDSCAPING

REFER TO SHEET C2.8 FOR LANDSCAPING

CIRCULATION, MARKINGS AND SIGNAGE

REFER TO SHEET C2.5 – CIRCULATION AND SIGNAGE PLAN FOR PAVEMENT MARKINGS, TRAFFIC CIRCULATION PATTERNS AND ROADWAY SIGNS.

GRADING

FOR DETAILED GRADING INCLUDING SPOT ELEVATIONS AND SLOPES REFER TO THE FOLLOWING SHEETS:

C2.3 – GRADING AND DRAINAGE PLAN (1 OF 2)
C2.4 – GRADING AND DRAINAGE PLAN (2 OF 2)

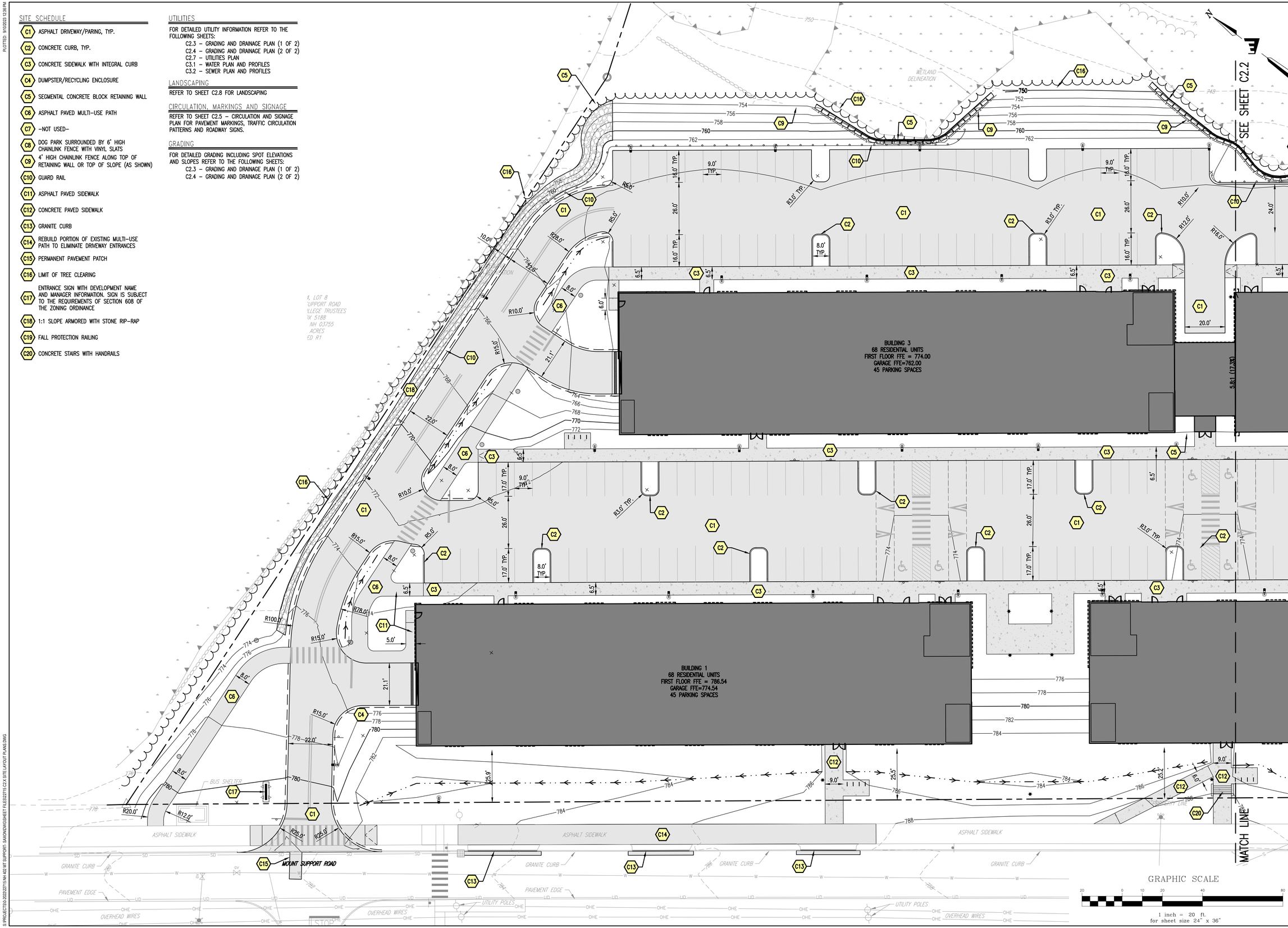

STATE OF NEW HAMPSHIRE
NICHOLAS A. FIORE
No. 13286
LICENSED
PROFESSIONAL ENGINEER
Stamp

No.	Description	Date

ENGINEERING VENTURES PC
208 Flynn Avenue, Suite 2A, Burlington, VT 05401 • 802-863-6225
85 Mechanic Street, Suite E2-3, Lebanon, NH 03766 • 603-442-9333
414 Union Street, Schenectady, NY 12305 • 518-630-9614
www.engineeringventures.com

SPNH LEBANON NORTH, LLC
c/o SAXON PARTNERS
25 RECREATION PARK DRIVE, SUITE 204
HINGHAM, MA 02043
781-875-3300

Sheet Title: SITE LAYOUT PLAN (1 OF 2)

Project Title: MAREK 2
392 & 402 MT SUPPORT ROAD
CITY OF LEBANON, GRAFTON COUNTY, NEW HAMPSHIRE

EV Project #	22715
Drawn By:	JWF
Checked By:	NAF
Scale:	1" = 20'
Date:	09/11/2023

C2.1

S:\PROJECTS\0-2022\22715 MK 402 MT SUPPORT - SAXON\DWGS\SHEET FILES\22715 C2.X SITE LAYOUT PLANS.DWG

SITE SCHEDULE

- C1 ASPHALT DRIVEWAY/PARING, TYP.
- C2 CONCRETE CURB, TYP.
- C3 CONCRETE SIDEWALK WITH INTEGRAL CURB
- C4 DUMPSTER/RECYCLING ENCLOSURE
- C5 SEGMENTAL CONCRETE BLOCK RETAINING WALL
- C6 ASPHALT PAVED MULTI-USE PATH
- C7 -NOT USED-
- C8 DOG PARK SURROUNDED BY 6' HIGH CHAINLINK FENCE WITH VINYL SLATS
- C9 4' HIGH CHAINLINK FENCE ALONG TOP OF RETAINING WALL OR TOP OF SLOPE (AS SHOWN)
- C10 GUARD RAIL
- C11 ASPHALT PAVED SIDEWALK
- C12 CONCRETE PAVED SIDEWALK
- C13 GRANITE CURB
- C14 REBUILD PORTION OF EXISTING MULTI-USE PATH TO ELIMINATE DRIVEWAY ENTRANCES
- C15 PERMANENT PAVEMENT PATCH
- C16 LIMIT OF TREE CLEARING
- C17 ENTRANCE SIGN WITH DEVELOPMENT NAME AND MANAGER INFORMATION. SIGN IS SUBJECT TO THE REQUIREMENTS OF SECTION 608 OF THE ZONING ORDINANCE
- C18 1:1 SLOPE ARMORED WITH STONE RIP-RAP
- C19 FALL PROTECTION RAILING
- C20 CONCRETE STAIRS WITH HANDRAILS

UTILITIES

FOR DETAILED UTILITY INFORMATION REFER TO THE FOLLOWING SHEETS:

C2.3 – GRADING AND DRAINAGE PLAN (1 OF 2)
C2.4 – GRADING AND DRAINAGE PLAN (2 OF 2)
C2.7 – UTILITIES PLAN
C3.1 – WATER PLAN AND PROFILES
C3.2 – SEWER PLAN AND PROFILES

LANDSCAPING

REFER TO SHEET C2.8 FOR LANDSCAPING

CIRCULATION, MARKINGS AND SIGNAGE

REFER TO SHEET C2.5 – CIRCULATION AND SIGNAGE PLAN FOR PAVEMENT MARKINGS, TRAFFIC CIRCULATION PATTERNS AND ROADWAY SIGNS.

GRADING

FOR DETAILED GRADING INCLUDING SPOT ELEVATIONS AND SLOPES REFER TO THE FOLLOWING SHEETS:

C2.3 – GRADING AND DRAINAGE PLAN (1 OF 2)
C2.4 – GRADING AND DRAINAGE PLAN (2 OF 2)

GRAPHIC SCALE

1 inch = 20 ft.
for sheet size 24" x 36"

STATE OF NEW HAMPSHIRE
NICHOLAS J. FIORE
No. 13286
LICENSED
PROFESSIONAL ENGINEER
Stamp

No.	Description	Date
1	REVISED PER NHDES AOT REVIEW COMMENTS	04/11/22

ENGINEERING VENTURES PC
208 Flynn Avenue, Suite 2A, Burlington, VT 05401 • 802-863-6225
85 Mechanic Street, Suite E2-3, Lebanon, NH 03766 • 603-442-9333
414 Union Street, Schenectady, NY 12305 • 518-630-9614
www.engineeringventures.com

SPNH LEBANON NORTH, LLC
c/o SAXON PARTNERS
25 RECREATION PARK DRIVE, SUITE 204
HINGHAM, MA 02043
781-875-3300

Sheet Title: SITE LAYOUT PLAN (2 OF 2)

Project Title: MAREK 2
392 & 402 MT SUPPORT ROAD
CITY OF LEBANON, GRAFTON COUNTY, NEW HAMPSHIRE

EV Project #	22715
Drawn By:	JWF
Checked By:	NAF
Scale:	1" = 20'
Date:	09/11/2023

C2.2

PLOTTED: 9/10/2023 12:35 PM
S:\PROJECTS\0-2022\22715 NH 402 MT SUPPORT - SAXON\WORKSHEET FILES\22715-C2-1 SITE LAYOUT PLAN.DWG

STORMWATER SCHEDULE

D2 5' I.D. DRAIN MANHOLE
RIM: 751.82
INV. IN: 739.89 (24" HDPE)
INV. OUT: 739.64 (24" HDPE)
SUMP: 739.31

D3 5' I.D. OUTLET STRUCTURE
RIM: 761.82
INV. IN: 750.90 (24" HDPE)
INV. IN: 749.90 (24" HDPE)
INV. OUT: 749.80 (24" HDPE)
SUMP: 747.80

D4 5' I.D. CATCH BASIN
RIM: 761.64
INV. IN: 751.20 (24" HDPE)
INV. OUT: 751.10 (24" HDPE)
INV. OUT: 752.40 (24" HDPE)
SUMP: 749.10

D5 4' I.D. CATCH BASIN
RIM: 760.60
INV. IN: 752.90 (18" HDPE)
INV. OUT: 752.40 (24" HDPE)
SUMP: 750.40

D6 4' I.D. CATCH BASIN
RIM: 762.12
INV. IN: 755.60 (18" HDPE)
INV. IN: 755.60 (12" HDPE)
INV. IN: 755.60 (6" PVC (FND DRAIN))
INV. OUT: 755.35 (18" HDPE)
SUMP: 753.35

D7 5' I.D. CATCH BASIN
RIM: 767.33
INV. IN: 761.65 (15" HDPE)
INV. IN: 761.65 (18" HDPE)
INV. OUT: 761.40 (18" HDPE)
SUMP: 759.40

D8 4' I.D. CATCH BASIN
RIM: 772.51
INV. IN: 767.75 (12" HDPE)
INV. IN: 767.75 (12" HDPE)
INV. IN: 768.82 (6" PVC (FND DRAIN))
INV. OUT: 767.50 (15" HDPE)
SUMP: 765.50

D9 4' I.D. CATCH BASIN
RIM: 776.55
INV. IN: 770.90 (12" HDPE)
INV. OUT: 770.80 (12" HDPE)
SUMP: 768.80

D10 4' I.D. CATCH BASIN
RIM: 781.24
INV. IN: 774.80 (12" HDPE)
INV. OUT: 774.70 (12" HDPE)
SUMP: 772.70

D11 4' I.D. CATCH BASIN
RIM: 783.27
INV. IN: 776.85 (12" HDPE)
INV. OUT: 776.60 (12" HDPE)
SUMP: 774.60

D12 4' I.D. CATCH BASIN
RIM: 783.43
INV. OUT: 778.89 (12" HDPE)
SUMP: 776.89

D13 4' I.D. CATCH BASIN
RIM: 772.55
INV. OUT: 767.30 (15" HDPE)
SUMP: 765.30

D14 4' I.D. CATCH BASIN
RIM: 772.55
INV. IN: 765.72 (15" HDPE)
INV. OUT: 765.47 (18" HDPE)
SUMP: 763.47

D15 4' I.D. CATCH BASIN
RIM: 772.55
INV. IN: 763.99 (18" HDPE)
INV. OUT: 763.74 (18" HDPE)
SUMP: 761.74

D16 4' I.D. CATCH BASIN
RIM: 771.03
INV. IN: 762.30 (18" HDPE)
INV. OUT: 762.00 (18" HDPE)
SUMP: 760.00

D17 4' I.D. MANHOLE
RIM: 750.18
INV. IN: 742.25 (15" HDPE)
INV. OUT: 742.00 (15" HDPE)
SUMP: 742.00

D18 4' I.D. CATCH BASIN
RIM: 771.67
INV. IN: 762.74 (15" HDPE)
INV. OUT: 762.49 (15" HDPE)
SUMP: 760.49

D19 3,500 GALLON SEDIMENT FOREBAY
RIM: 772.01
INV. IN: 763.00 (15" HDPE)
INV. OUT: 762.75 (15" HDPE)
SUMP: 760.90

D20 4' I.D. CATCH BASIN
RIM: 771.50
INV. IN: 763.30 (12" HDPE)
INV. IN: 766.35 (12" HDPE)
INV. OUT: 763.01 (15" HDPE)
SUMP: 761.01

D21 4' I.D. CATCH BASIN
RIM: 771.72
INV. OUT: 766.80 (12" HDPE)
SUMP: 764.80

D22 4' I.D. CATCH BASIN
RIM: 772.45
INV. IN: 763.87 (12" HDPE)
INV. IN: 763.87 (6" PVC (FND DRAIN))
INV. OUT: 763.62 (12" HDPE)
SUMP: 761.62

D23 4' I.D. CATCH BASIN
RIM: 774.31
INV. IN: 769.48 (12" HDPE)
INV. OUT: 764.75 (12" HDPE)
SUMP: 762.75

D24 4' I.D. CATCH BASIN
RIM: 776.93
INV. IN: 771.90 (12" HDPE)
INV. OUT: 771.65 (12" HDPE)
SUMP: 769.65

D25 4' I.D. CATCH BASIN
RIM: 783.46
INV. OUT: 778.20 (12" HDPE)
SUMP: 776.20

D26 CULTEC R902HD 4 ROWS OF 54 CHAMBERS (216 CHAMBERS)
STONE INVERT = 750.0
FIELD HEIGHT = 5.75'
FOREBAY AND DETENTION SYSTEM

D27 4' I.D. CATCH BASIN
RIM: 760.60
INV. OUT: 751.10 (12" HDPE)
SUMP: 749.10

D28 4' I.D. CATCH BASIN
RIM: 760.60
INV. IN: 751.00 (12" HDPE)
SUMP: 749.00

D29 4' I.D. CATCH BASIN
RIM: 761.10
INV. IN: 755.10 (6" PVC (FND DRAIN))
INV. IN: 751.35 (12" HDPE)
INV. OUT: 751.10 (12" HDPE)
SUMP: 749.10

D30 5' I.D. CATCH BASIN
RIM: 756.05
INV. OUT: 751.74 (12" HDPE)
SUMP: 749.74

D31 3' I.D. NYOPLAST STRUCTURE
RIM: 741.70
INV. IN: 740.00 (8" VERT. ORIFICE (8))
INV. IN: 737.20 (3" VERT. ORIFICE)
INV. OUT: 737.20 (24" HDPE)
SUMP: 735.70

D32 24" HDPE WEIR OVERFLOW AT BYPASS SYSTEM

D33 TRENCH DRAIN
START INV. = 774.0
END INV. = 773.7

D34 TRENCH DRAIN
START INV. = 761.5
END INV. = 761.2

D35 GRAVEL WETLAND
CELL 1 AREA = 3,700 SF
CELL 2 AREA = 2,600 SF

D36 ISOLATOR ROW 1 ROW OF 54

D37 FLARED END SECTION
INV. = 737.9

D38 FLARED END SECTION
INV. = 737.9

D39 FLARED END SECTION
INV. = 732.7

D40 RIPRAP BYPASS, ELEV. OF EARTHEN BERM = 740.5, 650 SF OF RIPRAP LINING.

D41 DAYLIGHT UNDERDRAIN IN CRUSHED STONE BEHIND WALL. 4" PERFORATED UNDERDRAIN INV. = 748.3

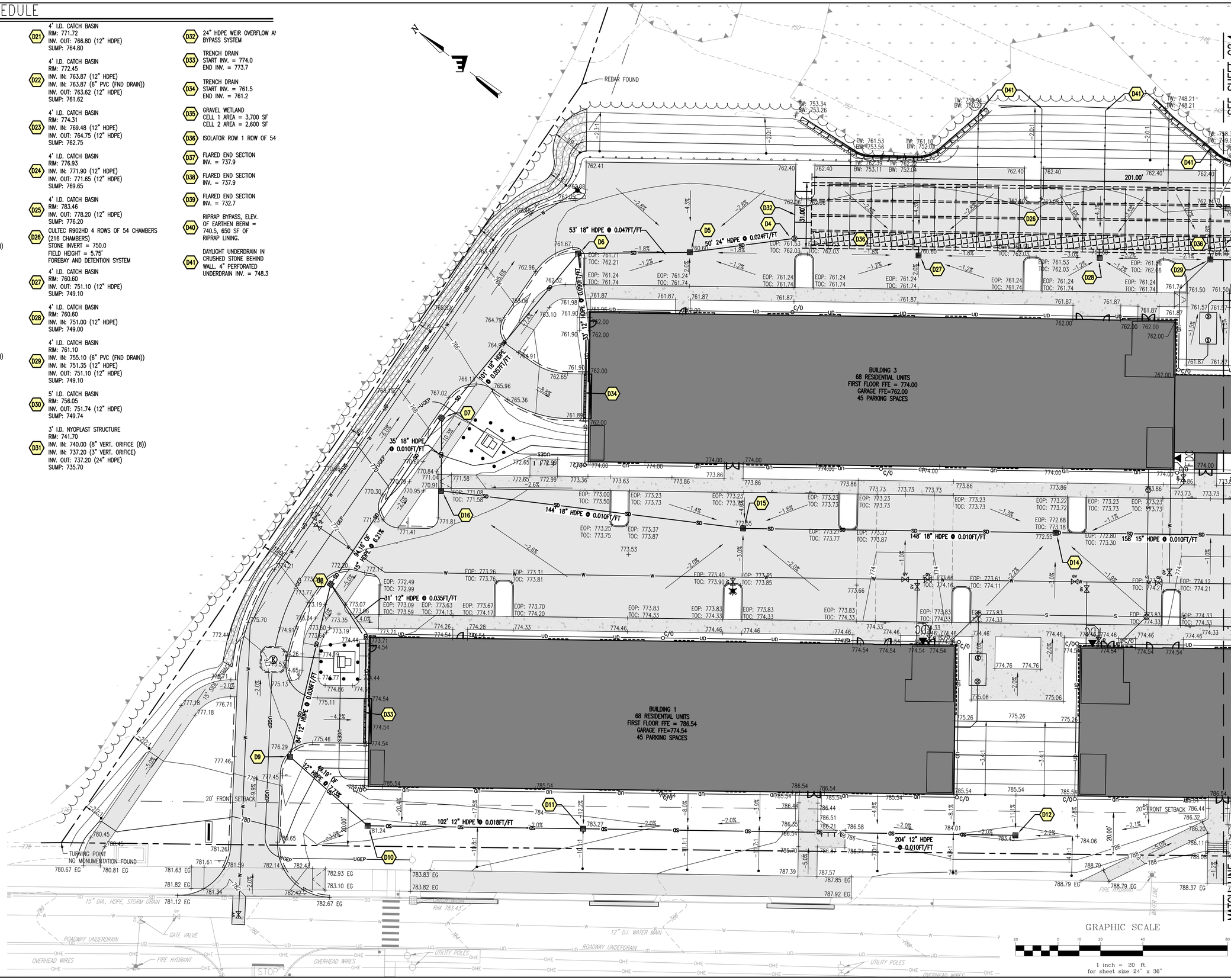

SEE SHEET C2.4

STATE OF NEW HAMPSHIRE
NICHOLAS A. FIORE
No. 13286
LICENSED
PROFESSIONAL ENGINEER
Stamp

No.	Description	Date

ENGINEERING VENTURES PC
208 Flynn Avenue, Suite 2A, Burlington, VT 05401 • 802-863-6225
85 Mechanic Street, Suite E2-3, Lebanon, NH 03766 • 603-442-9333
414 Union Street, Schenectady, NY 12305 • 518-630-9614
www.engineeringventures.com

SPNH LEBANON NORTH, LLC
c/o SAXON PARTNERS
25 RECREATION PARK DRIVE, SUITE 204
HINGHAM, MA 02043
781-875-3300

Sheet Title: GRADING AND DRAINAGE PLAN (1 OF 2)

Project Title: MAREK 2
392 & 402 MT SUPPORT ROAD
CITY OF LEBANON, GRAFTON COUNTY, NEW HAMPSHIRE

EV Project #	22715
Drawn By:	AMJF
Checked By:	NAF
Scale:	1" = 20'
Date:	09/11/23

C2.3

PLOTTED: 9/13/2023 12:33 PM
S:\PROJECTS\0-2022\22715 NH 402 MT SUPPORT - SAXON\DWG\SHEET FILES\22715 C2.3 DRAINAGE.DWG

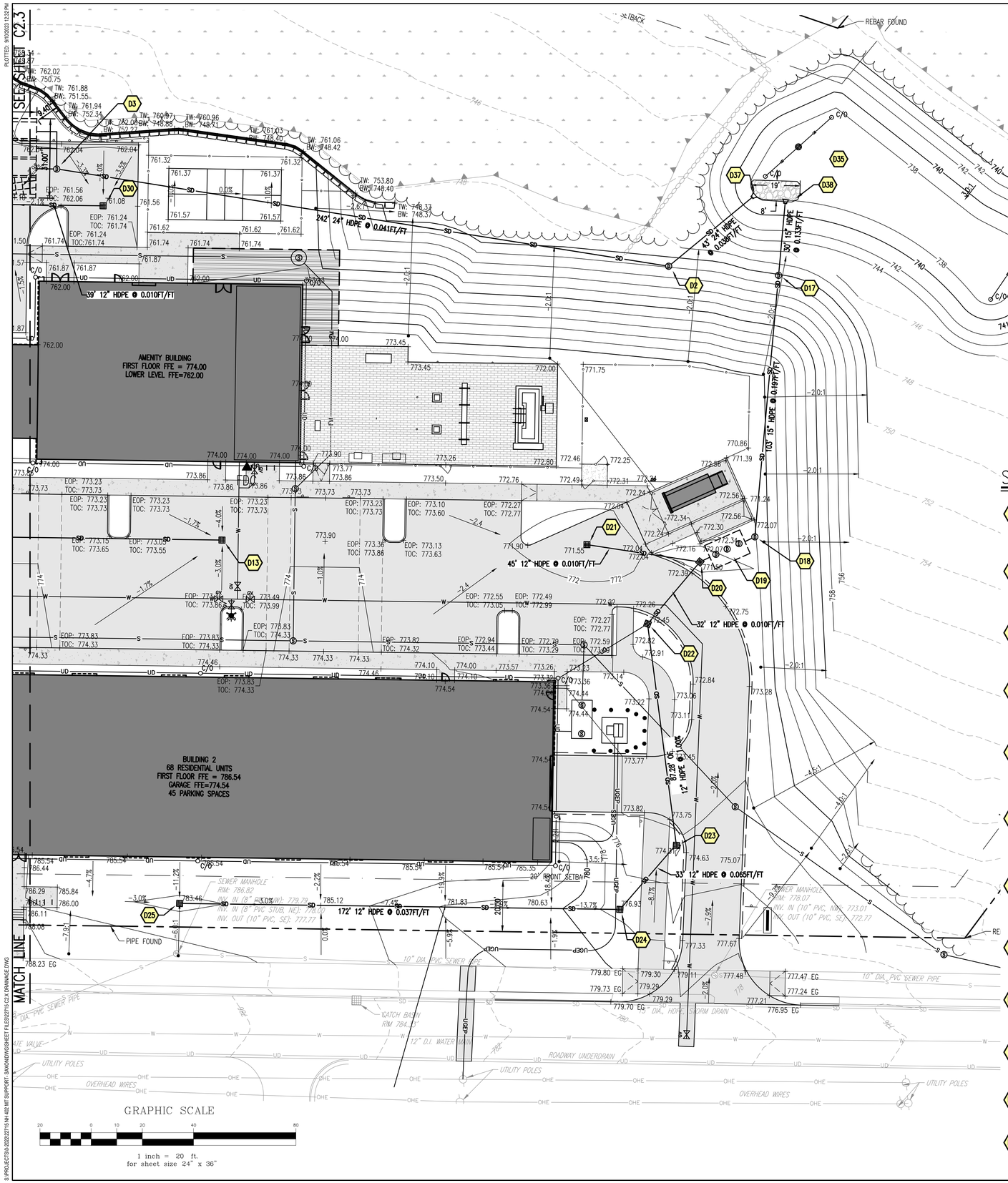

STORMWATER SCHEDULE

D2 5' I.D. DRAIN MANHOLE
RIM: 751.82
INV. IN: 739.89 (24" HDPE)
INV. OUT: 739.64 (24" HDPE)
SUMP: 739.31

D3 5' I.D. OUTLET STRUCTURE
RIM: 761.82
INV. IN: 750.90 (24" HDPE)
INV. IN: 749.90 (24" HDPE)
INV. OUT: 749.80 (24" HDPE)
SUMP: 747.80

D4 5' I.D. CATCH BASIN
RIM: 761.64
INV. IN: 751.20 (24" HDPE)
INV. OUT: 751.10 (24" HDPE)
INV. OUT: 752.40 (24" HDPE)
SUMP: 749.10

D5 4' I.D. CATCH BASIN
RIM: 760.60
INV. IN: 752.90 (18" HDPE)
INV. OUT: 752.40 (24" HDPE)
SUMP: 750.40

D6 4' I.D. CATCH BASIN
RIM: 762.12
INV. IN: 755.60 (18" HDPE)
INV. IN: 755.60 (12" HDPE)
INV. IN: 755.60 (6" PVC (FND DRAIN))
INV. OUT: 755.35 (18" HDPE)
SUMP: 753.35

D7 5' I.D. CATCH BASIN
RIM: 767.33
INV. IN: 761.65 (15" HDPE)
INV. IN: 761.65 (18" HDPE)
INV. OUT: 761.40 (18" HDPE)
SUMP: 759.40

D8 4' I.D. CATCH BASIN
RIM: 772.51
INV. IN: 767.75 (12" HDPE)
INV. IN: 767.75 (12" HDPE)
INV. IN: 768.82 (6" PVC (FND DRAIN))
INV. OUT: 767.50 (15" HDPE)
SUMP: 765.50

D9 4' I.D. CATCH BASIN
RIM: 776.55
INV. IN: 770.90 (12" HDPE)
INV. OUT: 770.80 (12" HDPE)
SUMP: 768.80

D10 4' I.D. CATCH BASIN
RIM: 781.24
INV. IN: 774.80 (12" HDPE)
INV. OUT: 774.70 (12" HDPE)
SUMP: 772.70

D11 4' I.D. CATCH BASIN
RIM: 783.27
INV. IN: 776.85 (12" HDPE)
INV. OUT: 776.60 (12" HDPE)
SUMP: 774.60

D12 4' I.D. CATCH BASIN
RIM: 783.43
INV. OUT: 778.89 (12" HDPE)
SUMP: 776.89

D13 4' I.D. CATCH BASIN
RIM: 772.55
INV. OUT: 767.30 (15" HDPE)
SUMP: 765.30

D14 4' I.D. CATCH BASIN
RIM: 772.55
INV. IN: 765.72 (15" HDPE)
INV. OUT: 765.47 (18" HDPE)
SUMP: 763.47

D15 4' I.D. CATCH BASIN
RIM: 772.55
INV. IN: 763.99 (18" HDPE)
INV. OUT: 763.74 (18" HDPE)
SUMP: 761.74

D16 4' I.D. CATCH BASIN
RIM: 771.03
INV. IN: 762.30 (18" HDPE)
INV. OUT: 762.00 (18" HDPE)
SUMP: 760.00

D17 4' I.D. MANHOLE
RIM: 750.18
INV. IN: 742.25 (15" HDPE)
INV. OUT: 742.00 (15" HDPE)
SUMP: 742.00

D18 4' I.D. CATCH BASIN
RIM: 771.67
INV. IN: 762.74 (15" HDPE)
INV. OUT: 762.49 (15" HDPE)
SUMP: 760.49

D19 3,500 GALLON SEDIMENT FOREBAY
RIM: 772.01
INV. IN: 763.00 (15" HDPE)
INV. OUT: 762.75 (15" HDPE)
SUMP: 760.90

D20 4' I.D. CATCH BASIN
RIM: 771.50
INV. IN: 763.30 (12" HDPE)
INV. IN: 766.35 (12" HDPE)
INV. OUT: 763.01 (15" HDPE)
SUMP: 761.01

D21 4' I.D. CATCH BASIN
RIM: 771.72
INV. OUT: 766.80 (12" HDPE)
SUMP: 764.80

D22 4' I.D. CATCH BASIN
RIM: 772.45
INV. IN: 763.87 (12" HDPE)
INV. IN: 763.87 (6" PVC (FND DRAIN))
INV. OUT: 763.62 (12" HDPE)
SUMP: 761.62

D23 4' I.D. CATCH BASIN
RIM: 774.31
INV. IN: 769.48 (12" HDPE)
INV. OUT: 764.75 (12" HDPE)
SUMP: 762.75

D24 4' I.D. CATCH BASIN
RIM: 776.93
INV. IN: 771.90 (12" HDPE)
INV. OUT: 771.65 (12" HDPE)
SUMP: 769.65

D25 4' I.D. CATCH BASIN
RIM: 783.46
INV. OUT: 778.20 (12" HDPE)
SUMP: 776.20

D26 CULTEC R902HD 4 ROWS OF 54 CHAMBERS (216 CHAMBERS)
STONE INVERT = 750.0
FIELD HEIGHT = 5.75'
FOREBAY AND DETENTION SYSTEM

D27 4' I.D. CATCH BASIN
RIM: 760.60
INV. OUT: 751.10 (12" HDPE)
SUMP: 749.10

D28 4' I.D. CATCH BASIN
RIM: 760.60
INV. IN: 751.00 (12" HDPE)
SUMP: 749.00

D29 4' I.D. CATCH BASIN
RIM: 761.10
INV. IN: 755.10 (6" PVC (FND DRAIN))
INV. IN: 751.35 (12" HDPE)
INV. OUT: 751.10 (12" HDPE)
SUMP: 749.10

D30 5' I.D. CATCH BASIN
RIM: 756.05
INV. OUT: 751.74 (12" HDPE)
SUMP: 749.74

D31 3' I.D. NYOPLAST STRUCTURE
RIM: 741.70
INV. IN: 740.00 (8" VERT. ORIFICE (8))
INV. IN: 737.20 (3" VERT. ORIFICE)
INV. OUT: 737.20 (24" HDPE)
SUMP: 735.70

D32 24" HDPE WEIR OVERFLOW AND MANIFOLD BYPASS SYSTEM

D33 TRENCH DRAIN
START INV. = 774.0
END INV. = 773.7

D34 TRENCH DRAIN
START INV. = 761.5
END INV. = 761.2

D35 GRAVEL WETLAND
CELL 1 AREA = 3,700 SF
CELL 2 AREA = 2,600 SF

D36 ISOLATOR ROW 1 ROW OF 54 CHAMBERS

D37 FLARED END SECTION
INV. = 737.9

D38 FLARED END SECTION
INV. = 737.9

D39 FLARED END SECTION
INV. = 732.7

D40 RIPRAP BYPASS, ELEV. OF EARTHEN BERM = 740.5, 650 SF OF RIPRAP LINING.

D41 DAYLIGHT UNDERDRAIN IN CRUSHED STONE BEHIND WALL. 4" PERFORATED UNDERDRAIN INV. = 748.3

STATE OF NEW HAMPSHIRE
NICHOLAS A. FIORE
No. 13286
LICENSED
PROFESSIONAL ENGINEER
Stamp

No.	Description	Date

ENGINEERING VENTURES PC
208 Flynn Avenue, Suite 2A, Burlington, VT 05401 • 802-863-6225
85 Mechanic Street, Suite E2-3, Lebanon, NH 03766 • 603-442-9333
414 Union Street, Schenectady, NY 12305 • 518-630-9614
www.engineeringventures.com

SPNH LEBANON NORTH, LLC
c/o SAXON PARTNERS
25 RECREATION PARK DRIVE, SUITE 204
HINGHAM, MA 02043
781-875-3300

Sheet Title: GRADING AND DRAINAGE PLAN (2 OF 2)

Project Title: MAREK 2
392 & 402 MT SUPPORT ROAD
CITY OF LEBANON, GRAFTON COUNTY, NEW HAMPSHIRE

EV Project #	22715
Drawn By:	AMJF
Checked By:	NAF
Scale:	1" = 20'
Date:	09/11/23

C2.4

PAVEMENT MARKINGS

- PM1 — 4" WIDE, DSLY, PAINTED CENTERLINE STRIPING, TYP.
- PM2 — 4" WIDE, SSLW, PARKING STALL STRIPING, TYP.
- PM3 — 10' WIDE CROSSWALK CONSISTING OF 12" WIDE, SSLW, PAINTED BARS SPACED 24" APART.
- PM4 — 36"X36", BLUE & WHIT, ADA WHEELCHAIR SYMBOL FOR ACCESSIBLE PARKING STALLS, TYP.
- PM5 — 18" WIDE, SSLW, STOP BAR, TYP.
- PM6 — 4" WIDE, SSLW, DIAGONAL ACCESS AISLE STRIPING, TYP.
- PM7 — 9' WIDE CROSSWALK CONSISTING OF 12" WIDE, SSLW, PAINTED BARS SPACED 24" APART.
- PM8 — 6.5' WIDE CROSSWALK CONSISTING OF 12" WIDE, SSLW, PAINTED BARS SPACED 24" APART.
- PM9 — 6' WIDE CHEVRON CONSISTING OF TWO, 12" WIDE, SSLW, PAINTED BARS SPACED 12" APART.

GRAPHIC SCHEDULE

- DIRECTION OF TRAVEL ARROWS PROVIDED FOR REFERENCE ONLY, NOT TO BE PAINTED ON PAVEMENT SURFACE
- ADA ACCESSIBLE ROUTE TO MOUNT SUPPORT ROAD PROVIDED FOR REFERENCE ONLY, NOT TO BE PAINTED ON PAVEMENT SURFACE

SIGN SCHEDULE

SIGN KEY:

SIGN	MUTCD DESIGNATIONS	COMMON NAME	SIZE
A	D9-6	HANDICAPPED	24" x 24"
B	D9-6P	VAN ACCESSIBLE (PLAQUE)	18" x 9"
C	R2-1	15-MPH SPEED LIMIT	24" X 30"
D	R1-1	STOP	30" x 30"
E	W11-15	BICYCLE AND PED. CROSSING	30" x 30"
F	R3-17AP	AHEAD	24" x 8"

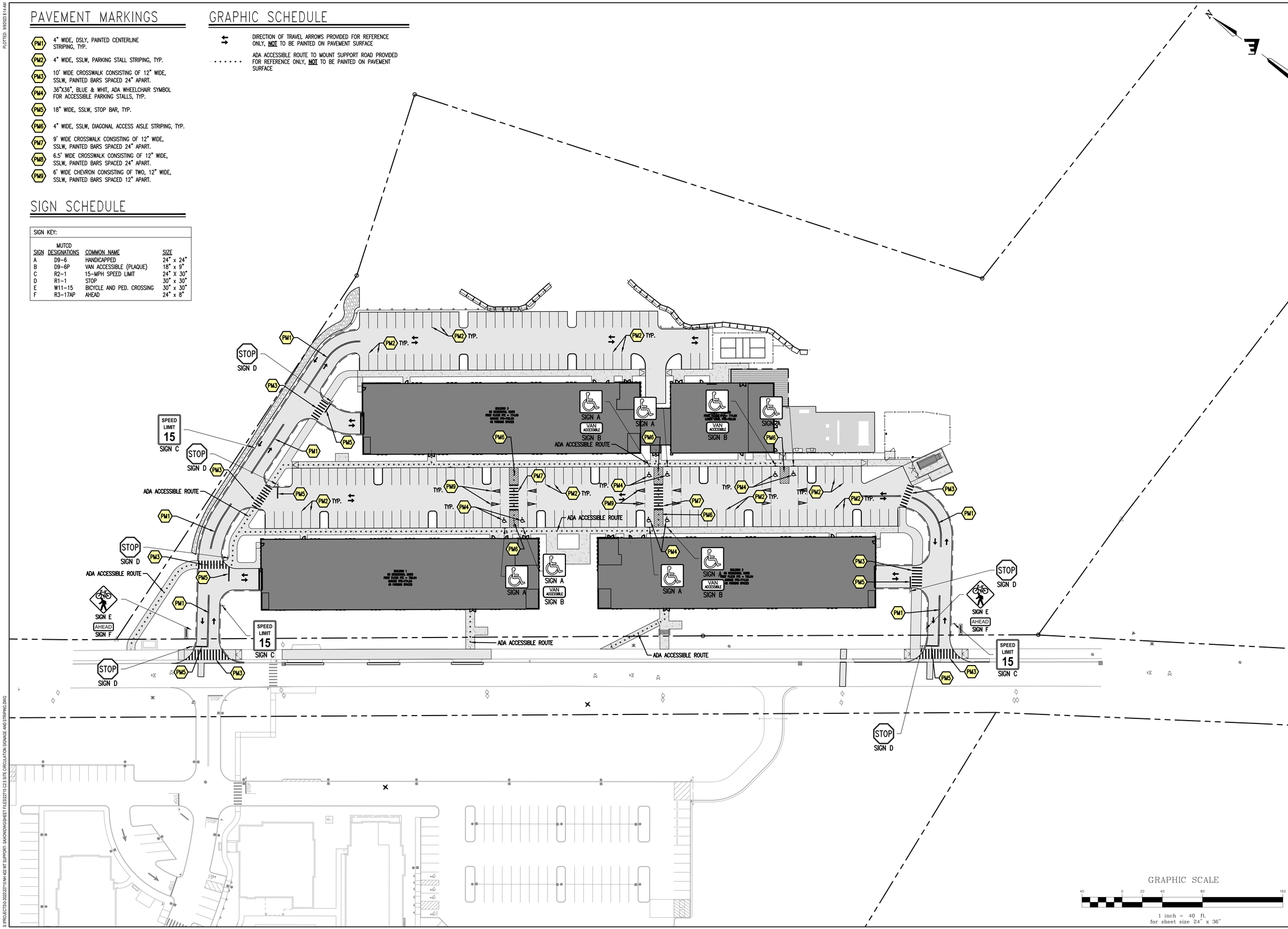

STATE OF NEW HAMPSHIRE
NICHOLAS A. FIORE
No. 13286
LICENSED
PROFESSIONAL ENGINEER
Stamp

No.	Description	Date

ENGINEERING VENTURES PC
208 Flynn Avenue, Suite 2A, Burlington, VT 05401 • 802-863-6225
85 Mechanic Street, Suite E2-3, Lebanon, NH 03766 • 603-442-9333
414 Union Street, Schenectady, NY 12305 • 518-630-9614
www.engineeringventures.com

SAXON PARTNERS
25 RECREATION PARK DRIVE, SUITE 204
HINGHAM, MA 02043
781-875-3300
802-343-8330

Sheet Title: SITE CIRCULATION, SIGNAGE AND STRIPING PLAN

Project Title: MAREK 2
402 MT SUPPORT ROAD
CITY OF LEBANON, GRAFTON COUNTY, NEW HAMPSHIRE

EV Project #	22715
Drawn By:	JWF
Checked By:	NAF
Scale:	1" = 40'
Date:	09/11/2023

C2.5

PLOTTED: 9/9/2023 8:14 AM
S:\PROJECTS\0-2022\22715 NH 402 MT SUPPORT - SAXON\DWG\SHEET FILES\22715 C2.5 SITE CIRCULATION SIGNAGE AND STRIPING.DWG

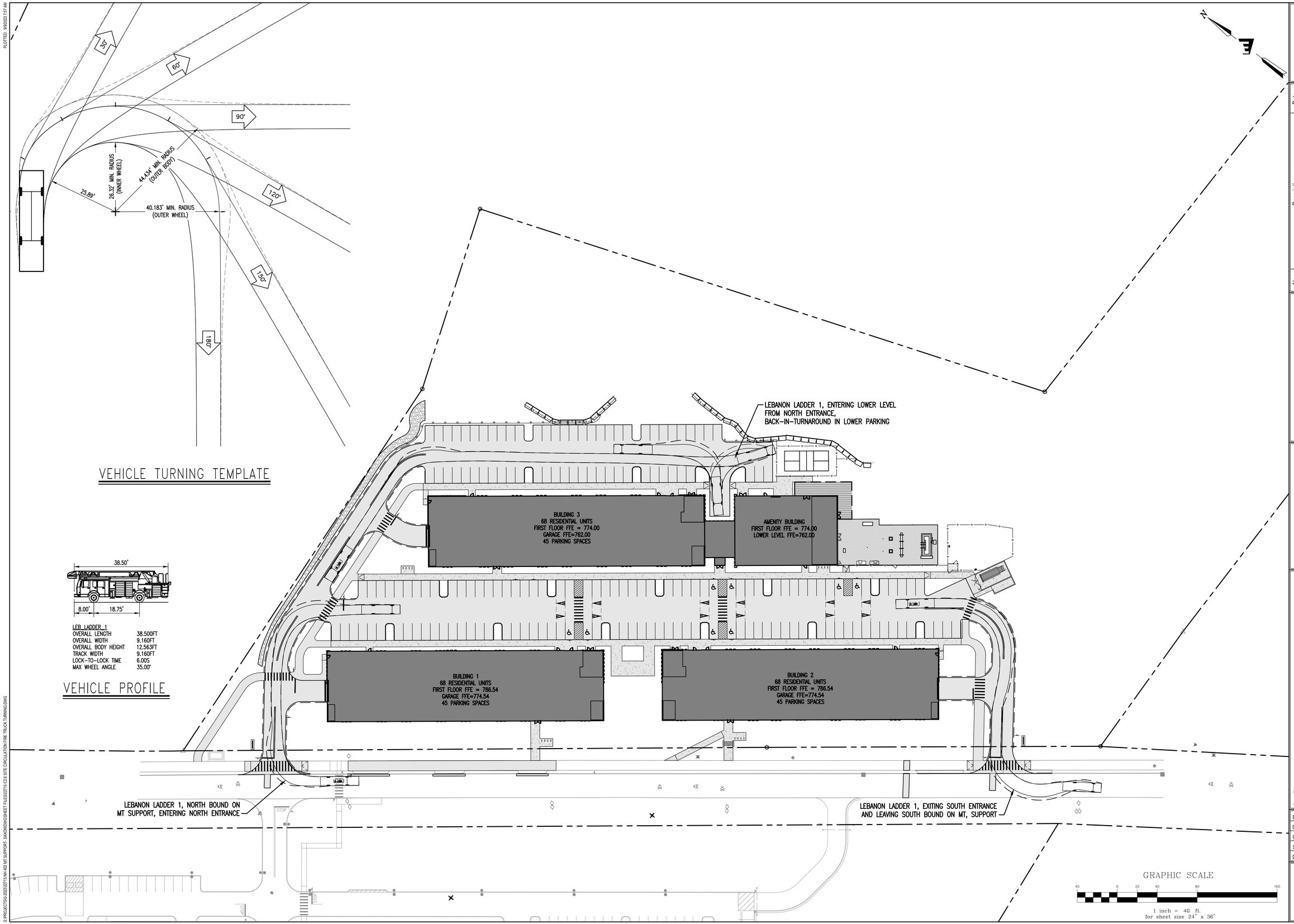

STATE OF NEW HAMPSHIRE
NICHOLAS A. FIORE
No. 13286
LICENSED
PROFESSIONAL ENGINEER
Stamp

No.	Description	Date
1	REVISED PER STAFF REVIEW COMMENTS	12/20/21

ENGINEERING VENTURES PC
208 Flynn Avenue, Suite 2A, Burlington, VT 05401 • 802-863-6225
85 Mechanic Street, Suite E2-3, Lebanon, NH 03766 • 603-442-9333
414 Union Street, Schenectady, NY 12305 • 518-630-9614
www.engineeringventures.com

SAXON PARTNERS
25 RECREATION PARK DRIVE, SUITE 204
HINGHAM, MA 02043
781-875-3300
802-343-6330

Sheet Title: SITE CIRCULATION, FIRE TRUCK TURNING MOVEMENTS

Project Title: MAREK 2
402 MT SUPPORT ROAD
CITY OF LEBANON, GRAFTON COUNTY, NEW HAMPSHIRE

EV Project #	22715
Drawn By:	JWF
Checked By:	NAF
Scale:	1" = 40'
Date:	9/11/2023

C2.6

PLOTTED: 9/8/2023 7:57 AM

S:\PROJECTS\2-2022\22715 NH 402 MT SUPPORT - SAXON\CIVIL\SHEET FILES\22715 C2.6 SITE CIRCULATION FIRE TRUCK TURNING.DWG

PLOTTED: 9/10/2023 12:30 PM

WATER NOTES

SEE SHETS C3.1 FOR WATER SYSTEM PLAN AND PROFILES. SEE SHEET C4.6 FOR WATER DETAILS AND NOTES.

SEWER NOTES

SEE SHEETS C3.2 FOR SANITARY SEWER COLLECTION SYSTEM PLAN AND PROFILES. SEE SHEET C4.5 FOR SEWER DETAILS AND NOTES.

FIRE ALARM NOTES

THE PROPOSED MUNICIPAL FIRE ALARM LOOP SHALL BE PROVIDED IN A DEDICATED 2" CONDUIT, SAME TRENCH AS THE TELECOMM UTILITIES, WITH NO POWER, AND MUNICIPAL FIRE ALARM BOXES SHALL BE LOCATED ON EACH BUILDING TO THE SATISFACTION OF THE LEBANON FIRE DEPARTMENT.

ELECTRICAL NOTES

- E1 PROPOSED ELECTRICAL TRANSFORMER
- E2 PROPOSED ELECTRICAL VAULT
- E3 PROPOSED ELECTRICAL DUCT BANK — (4") 2X2 AND (6") 2X2
- E4 PROPOSED ELECTRICAL DUCT BANK — (4") 2X1
- E5 EXACT LOCATION AND ELEVATION OF SERVICE ENTRANCE TO BE DETERMINED BY ELECTRICAL ENGINEER. REFER TO MEP PLANS AND DETAILS.
- E6 LIGHT POLE – TYP. OF 36 (REFER TO LIGHTING PLAN)
- E7 LIGHT BOLLARD – TYP. OF 20 (REFER TO LIGHTING PLAN)
- E8 PEDESTRIAN LIGHT – TYP. OF 10 (REFER TO LIGHTING PLAN)

NOTE

UNDERGROUND UTILITIES, INCLUDING ELECTRIC, TELEPHONE, AND CABLE, MUST MAINTAIN A MINIMUM CLEARANCE OF 10 FEET FROM ALL PROPOSED WATER LINES.

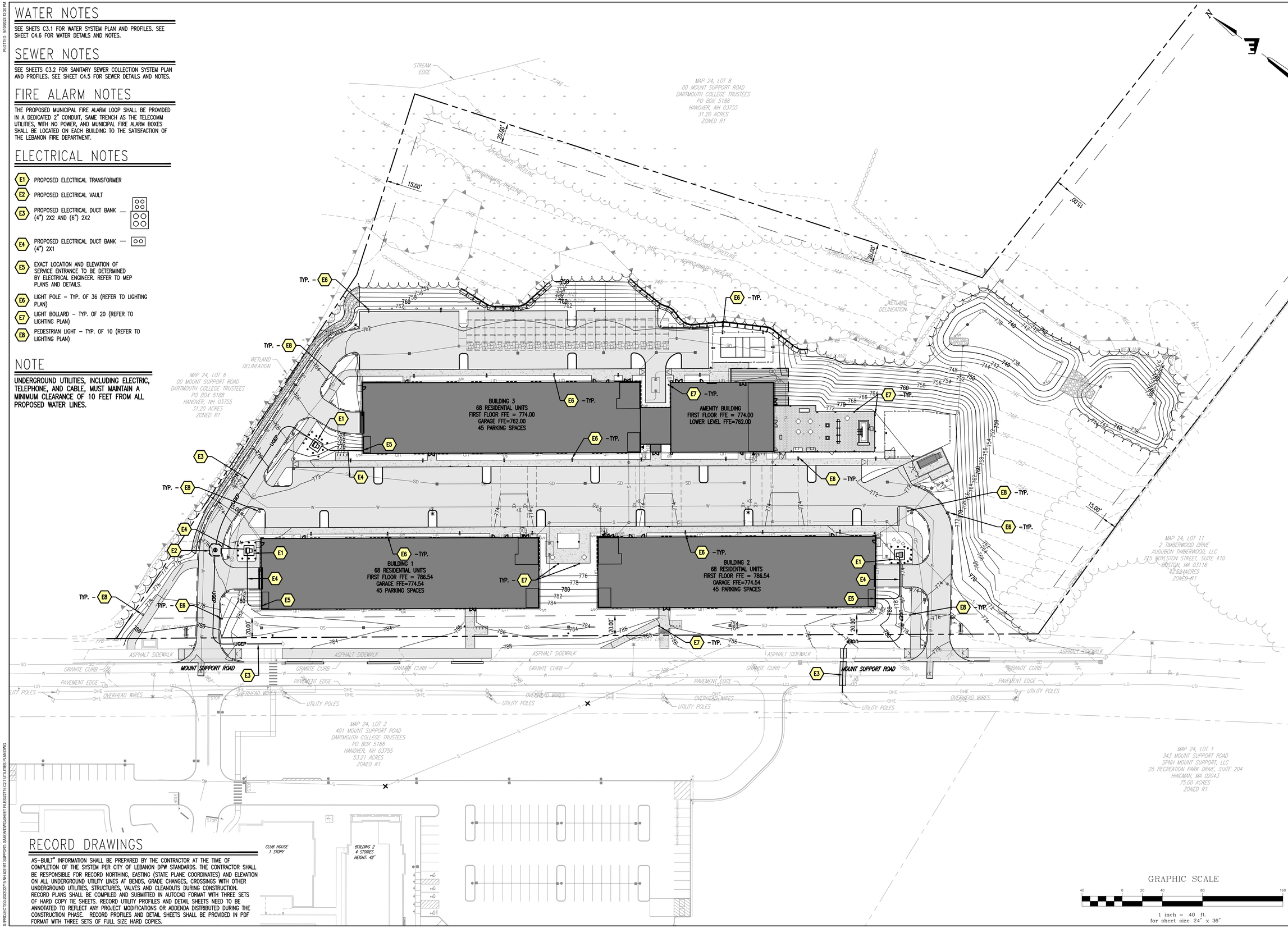

RECORD DRAWINGS

AS-BUILT" INFORMATION SHALL BE PREPARED BY THE CONTRACTOR AT THE TIME OF COMPLETION OF THE SYSTEM PER CITY OF LEBANON DPW STANDARDS. THE CONTRACTOR SHALL BE RESPONSIBLE FOR RECORD NORTHING, EASTING (STATE PLANE COORDINATES) AND ELEVATION ON ALL UNDERGROUND UTILITY LINES AT BENDS, GRADE CHANGES, CROSSINGS WITH OTHER UNDERGROUND UTILITIES, STRUCTURES, VALVES AND CLEANOUTS DURING CONSTRUCTION. RECORD PLANS SHALL BE COMPILED AND SUBMITTED IN AUTOCAD FORMAT WITH THREE SETS OF HARD COPY TIE SHEETS. RECORD UTILITY PROFILES AND DETAIL SHEETS NEED TO BE ANNOTATED TO REFLECT ANY PROJECT MODIFICATIONS OR ADDENDA DISTRIBUTED DURING THE CONSTRUCTION PHASE. RECORD PROFILES AND DETAIL SHEETS SHALL BE PROVIDED IN PDF FORMAT WITH THREE SETS OF FULL SIZE HARD COPIES.

GRAPHIC SCALE

40 0 20 40 80 160

1 inch = 40 ft.
for sheet size 24" x 36"

STATE OF NEW HAMPSHIRE
NICHOLAS A. FIORE
No. 13286
LICENSED
PROFESSIONAL ENGINEER
Stamp

No.	Description	Date

ENGINEERING VENTURES PC
208 Flynn Avenue, Suite 2A, Burlington, VT 05401 • 802-863-6225
85 Mechanic Street, Suite E2-3, Lebanon, NH 03766 • 603-442-9333
414 Union Street, Schenectady, NY 12305 • 518-630-9614
www.engineeringventures.com

SPNH LEBANON NORTH, LLC
c/o SAXON PARTNERS
25 RECREATION PARK DRIVE, SUITE 204
HINGHAM, MA 02043
781-875-3300

Sheet Title: UTILITIES PLAN

Project Title: MAREK 2
392 & 402 MT SUPPORT ROAD
CITY OF LEBANON, GRAFTON COUNTY, NEW HAMPSHIRE

EV Project #	22715
Drawn By:	JWF
Checked By:	NAF
Scale:	1" = 40'
Date:	09/11/2023

C2.7

S:\PROJECTS\0-9\2022\715 MT 402 MT SUPPORT, SAXON\DWG\SHEET FILES\22715 C2.7 UTILITIES PLAN.DWG

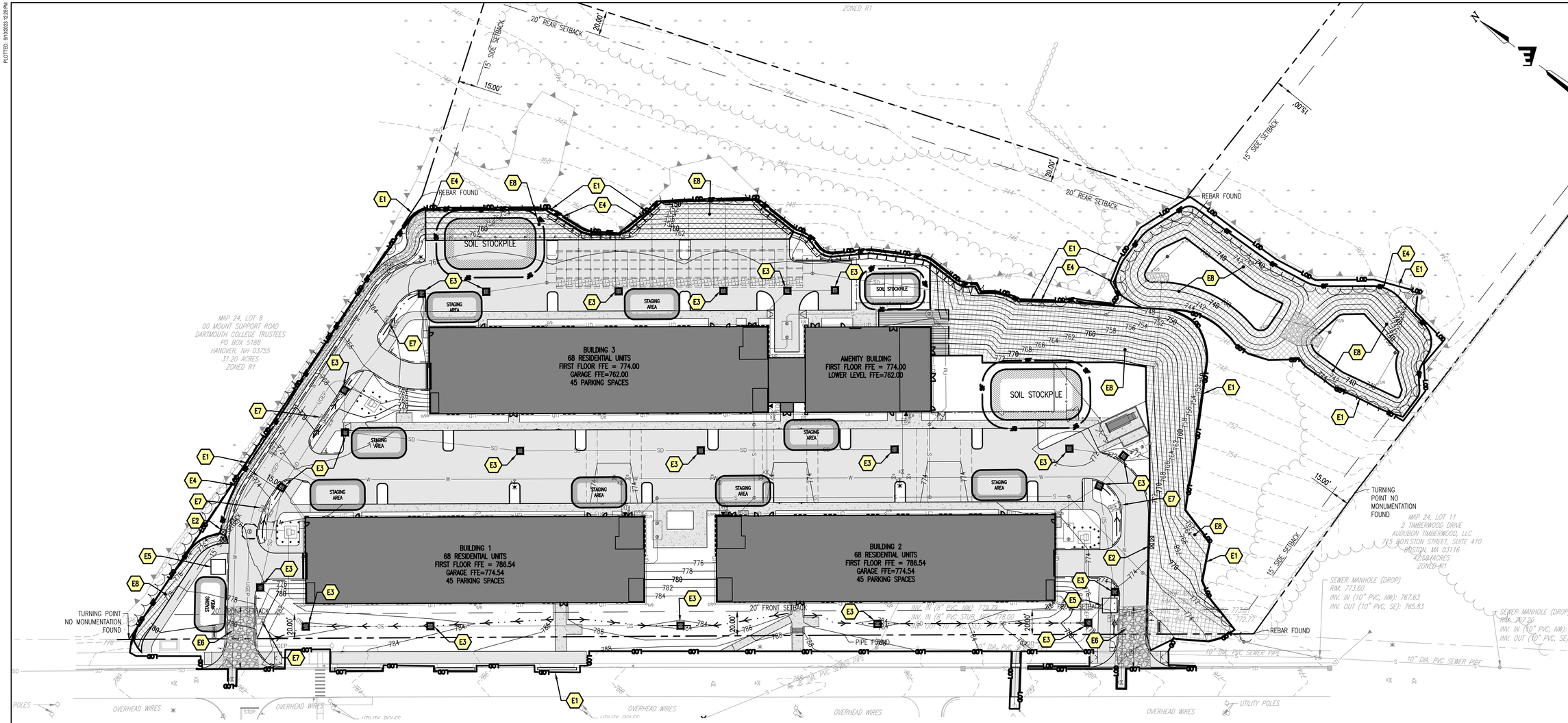

EROSION CONTROL LEGEND

EROSION PREVENTION AND SEDIMENT CONTROL STRATEGY
THE FOLLOWING TECHNIQUES WILL BE UTILIZED AS PART OF A SEDIMENT AND EROSION CONTROL PROGRAM. THE SEDIMENT AND EROSION CONTROL PROGRAM WILL BE IMPLEMENTED IN STAGES. CERTAIN ITEMS FROM ONE STAGE WILL LIKELY OVERLAP OR TAKE PLACE CONCURRENTLY WITH ITEMS FROM OTHER STAGES. HAY PRODUCTS SHALL NOT BE USED.

TEMPORARY INLET PROTECTION – STONE COLLARS AND/OR INLET SOCKS. INSTALL AS INDICATED ON PLANS. STONE TO BE REMOVED AND REPLACED WITH CLEAN STONE WHEN SEDIMENT IS ≤ 1/2 DEPTH OF STONE. REMOVE ALL SEDIMENT COLLECTED IN STRUCTURE OR SOCK AS SOON AS POSSIBLE.

STONE CHECK DAM
THIS STRUCTURAL MEASURE IS ALONG DITCHES/ SWALES AND IN OTHER LOCATIONS INDICATED ON THIS PLAN TO SLOW STORMWATER RUNOFF AND TRAP SEDIMENT PARTICLES. THESE WILL REMAIN IN PLACE AND BE MAINTAINED UNTIL THE PROJECT SITE HAS BEEN PERMANENTLY STABILIZED.

PERMANENT EROSION CONTROL NETTING.
THIS STRUCTURAL MEASURE IS INSTALLED IN AREAS THAT HAVE SLOPES 3:1 AND GREATER AND IN OTHER LOCATIONS INDICATED ON THIS PLAN TO STABILIZE THE SLOPE AND REDUCE THE EROSION POTENTIAL. THE NETTING IS TYPICALLY IMPREGNATED WITH GRASS SEED AND SOMETIMES STAPLED TO THE EXPOSED SOIL. THESE WILL REMAIN IN PLACE AND BE MAINTAINED UNTIL THE PROJECT SITE HAS BEEN PERMANENTLY STABILIZED.

TEMPORARY STABILIZED CONSTRUCTION ENTRANCE
THIS STRUCTURAL MEASURE IS A STABILIZED PAD OF AGGREGATE UNDERLAIN WITH FILTER FABRIC LOCATED AT ANY POINT WHERE TRAFFIC WILL BE ENTERING OR LEAVING A CONSTRUCTION SITE TO OR FROM A PUBLIC RIGHT-OF-WAY, STREET, ALLEY, SIDEWALK, OR PARKING AREA. THE PURPOSE OF A STABILIZED CONSTRUCTION ENTRANCE IS TO REDUCE OR ELIMINATE THE TRACKING OF SEDIMENT ONTO PUBLIC RIGHTS-OF-WAY OR STREETS. THIS WILL REMAIN IN PLACE AND BE MAINTAINED UNTIL THE PROJECT SITE HAS BEEN PERMANENTLY STABILIZED. ONCE REMOVED, THE IMPACTED AREA SHALL BE SEEDED AND MULCHED.

TEMPORARY SEDIMENT BASIN
THIS STRUCTURAL MEASURE INVOLVES CONSTRUCTING TEMPORARY SEDIMENT BASINS IN THE LOCATION OF PROPOSED STORMWATER PONDS. GENERALLY THE STORMWATER PONDS CAN BE CONSTRUCTED AS SHOWN ON THE PLANS HOWEVER ORIFICE ON THE OUTLET STRUCTURES SHALL BE OMITTED UNTIL THE SITE IS STABILIZED TO IMPOUND RUNOFF AND ALLOW FOR SETTLING OF SUSPENDED FINES. THIS WILL REMAIN IN PLACE AND BE MAINTAINED UNTIL THE PROJECT SITE HAS BEEN PERMANENTLY STABILIZED. ONCE THE SITE IS STABILIZED, SEDIMENT SHALL BE REMOVED FROM THE BASINS AND THE OUTLET ORIFICE SHALL BE DRILLED INTO THE OUTLET STRUCTURE AS NOTED ON THE PLANS.

STAGING AREA

SOIL STOCKPILE

TEMPORARY STAGING AND WASTE AREAS (APPROXIMATE)
THESE ARE APPROVED LOCATIONS WHERE NON-SOIL, NON-ERODIBLE MATERIALS MAY BE STORED. SOILS SHALL NOT BE STORED IN THESE AREAS.

TEMPORARY SOIL STOCKPILE AREAS (APPROXIMATE)
THESE ARE APPROVED LOCATIONS WHERE TOPSOIL AND OTHER SOIL MATERIALS MAY BE STORED. THESE STOCKPILES WILL BE PROTECTED FROM EROSION BY A NUMBER OF METHODS, INCLUDING INSTALLING SILT FENCING AROUND THE DOWN GRADIENT PERIMETER OF THE STOCKPILE AND SEEDING AND MULCHING THE STOCKPILE WHEN NOT IN USE FOR MORE THAN FIVE DAYS.

TEMPORARY STRAW FIBER ROLL
STRAW FIBER ROLLS ARE FLEXIBLE, CYLINDRICAL SEDIMENT RETENTION FIBER ROLLS (SRFRS) COMPRISED OF VARIOUS TYPES OF COMPRESSED MATRIXES, DESIGNED TO REDUCE HYDRAULIC ENERGY AND FILTER SEDIMENT-LADEN STORMWATER RUNOFF ON SLOPES AND IN CHANNELS. SRFRS ARE DESIGNED TO BE USED AS PERIMETER CONTROLS, SLOPE INTERCEPTOR DEVICES, CHECK DAMS, AROUND TEMPORARY SOIL STOCKPILES, AT CURB CUTS AND DRAIN INLETS. SRFRS SHOULD BE INSTALLED IN ACCORDANCE WITH MANUFACTURER'S GUIDELINES AND SECURED WITH WOODEN STAKES. THESE WILL REMAIN IN PLACE AND BE MAINTAINED UNTIL THE PROJECT SITE HAS BEEN PERMANENTLY STABILIZED.

LIMITS OF DISTURBANCE
THE CONTRACTOR SHALL CONTAIN ANY EARTH MOVING ACTIVITIES WITHIN THE DESIGNATED LIMITS SHOWN ON THIS PLAN. THE ENGINEER SHALL REVIEW THE SITE TO MAKE ANY ADJUSTMENTS TO ACCOUNT FOR ENVIRONMENTALLY SENSITIVE AREAS, SPECIMEN TREES AND SPECIAL AREAS OF CONCERN.

CONSTRUCTION SEQUENCE

1. CONTRACTOR TO COORDINATE STOCKPILE AND STAGING AREAS WITH THE OWNER.
2. PRIOR TO THE START OF CONSTRUCTION THE CONTRACTOR SHALL HOST A PRECONSTRUCTION MEETING WITH OWNER, ENGINEER, CITY PLANNING, POLICE, FIRE, AND PUBLIC WORKS STAFF.
3. PRIOR TO ANY OTHER WORK, DOUBLE ROW OF STRAW WATTLES BE INSTALLED UPSLOPE OF THE WETLANDS DOWNGRADIENT OF SEGMENTED BLOCK WALL. THESE SHALL REMAIN IN PLACE AND BE MAINTAINED UNTIL THE PROJECT SITE HAS BEEN STABILIZED. SEDIMENT SHALL BE REMOVED FROM BEHIND THE WATTLES WHEN IT BECOMES 3 INCHES DEEP. THE WATTLES WILL BE REPAIRED AS NECESSARY TO MAINTAIN A PROPER SEDIMENT BARRIER.
4. INSTALL TEMPORARY GRAVEL CONSTRUCTION ENTRANCE/EXIT.
5. INSTALL INLET PROTECTION ON EXISTING CATCH BASINS AFFECTED DURING CONSTRUCTION.
6. ROUGH GRADE AND STOCKPILE TOPSOIL SURROUNDED BY SILT FENCE.
7. DEMO EXISTING STRUCTURES AS REQUIRED.
8. CLEAR AND GRUB, REMOVE LOOSE PAVING/DEMO PAVING AS REQUIRED AND HAUL OFF SITE USING EXISTING PARKING AREA AS STAGING.
9. GRADE DRIVE ENTRANCE AND EXCAVATE BUILDING PADS
10. BEGIN VERTICAL CONSTRUCTION OF BUILDING FOUNDATIONS CONCURRENT WITH WATER AND SEWER UTILITIES.
14. INSTALL STORMWATER PIPING AND STRUCTURES
15. EXCAVATE AND PREP FOR INFILTRATION SYSTEM, IMPORT BASE SUBGRADE MATERIALS AS NECESSARY.
16. EXCAVATE AND PREP FOR GRAVEL WETLAND, INSTALL PIPING AND APPURTENANCES, APPLY FABRIC AS INDICATED, IMPORT WASHED STONES AND PEA GRAVEL, WETLAND MUCK, COMPLETE WETLAND CONSTRUCTION
17. BACKFILL AND SUBGRADE PREP FOR NEW PARKING AND SIDEWALK AREAS
18. COMPLETE FINAL GRADING OF SITE. PLACE TOPSOIL AND PERMANENTLY VEGETATE, LANDSCAPE, AND MULCH.
19. INSTALL LIGHT POLES.
20. PAVE BASE COURSE.
21. STABILIZE EXPOSED SLOPES AND SOILS AS SOON AS GRADED, REPAIR AND REESTABLISH ALL DISTURBED VEGETATED/LAWN AREAS, AND MAINTAIN UNTIL ADEQUATELY VEGETATED.
22. PAVE WEARING COURSE.
23. AFTER THE SITE IS APPROVED BY THE ENGINEER AS ADEQUATELY STABILIZED, REMOVE ALL TEMPORARY BMPS.
24. ANTICIPATED FINAL COMPLETION DATE SUMMER/FALL 2022.

STORMWATER POLUTION PREVENTION NOTES

- E1 LIMIT OF DISTURBANCE
- E2 PORTABLE SANITATION FACILITIES, TO BE STAKED DOWN AND SECURED
- E3 INLET PROTECTION (TYP.)
- E4 DOUBLE ROW OF STRAW FIBER ROLL (TYP.)
- E5 CONCRETE WASHOUT
- E6 STABILIZED CONSTRUCTION ENTRANCE
- E7 CHECK DAM
- E8 EROSION CONTROL NETTING

GRAPHIC SCALE
40 0 20 40 80 160
1 inch = 40 ft.
for sheet size 24" x 36"

STATE OF NEW HAMPSHIRE
NICHOLAS A. FIORE
No. 13286
LICENSED
PROFESSIONAL ENGINEER
Stamp

No.	Description	Date

ENGINEERING VENTURES PC
208 Flynn Avenue, Suite 2A, Burlington, VT 05401 • 802-863-6225
85 Mechanic Street, Suite E2-3, Lebanon, NH 03766 • 603-442-9333
414 Union Street, Schenectady, NY 12305 • 518-630-9614
www.engineeringventures.com

SPNH LEBANON NORTH, LLC
c/o SAXON PARTNERS
25 RECREATION PARK DRIVE, SUITE 204
HINGHAM, MA 02043
781-875-3300

Sheet Title: EROSION PREVENTION AND SEDIMENT CONTROL PLAN

Project Title: MAREK 2
392 & 402 MT SUPPORT ROAD
CITY OF LEBANON, GRAFTON COUNTY, NEW HAMPSHIRE

EV Project #	22715
Drawn By:	ADM
Checked By:	NAF
Scale:	1" = 40'
Date:	09/11/2023

C2.8

PLOTTED: 9/10/2023 12:28 PM

S:\PROJECTS\0-2022\22715 NH 402 MT SUPPORT - SAXON\DWG\SHEET FILES\22715 C2.8 EROSION CONTROL PLAN.DWG

PLOTTED: 9/10/2023 12:23 PM

WATER SCHEDULE

- **W1** 12" TAPPING SLEEVE AND VALVE WITH 12"X8" REDUCER FOR CONNECTION TO EXISTING 12" WATERMAIN, COORDINATE WORK WITH LEBANON DEPARTMENT OF PUBLIC WORKS.
- **W2** 8" DIA. DUCTILE IRON WATER LINE
- **W3** 8" DIA. HORIZONTAL BEND FITTING AS NEEDED TO MATCH ALIGNMENT SHOWN, TYP.
- **W4** 8"X8"X6" REDUCING HYDRANT TEE, TYP.
- **W5** 6" DIA. GATE VALVE, MJXMJ WITH MECHANICAL RESTRAINTS, TYP.
- **W6** 6" DIA. DUCTILE IRON WATER LINE, TYP.
- **W7** FIRE HYDRANT, TYP.
- **W8** 8" DIA. GATE VALVE, MJXMJ WITH MECHANICAL RESTRAINTS, TYP.
- **W9** 8"X8"X8" TEE FOR BUIDLING SERVICE, TYP.
- **W10** 8"X8"X6" REDUCING TEE FOR DOMESTIC WATER SERVICE, TYP.
- **W11** 6" DOMESTIC WATER SERVICE ENTRANCE, TYP. INVERT ELEVATION TO MATCH FIRE SERVICE ENTRANCE ELEVATION SHOWN ON PROFILES.
- **W12** 8" FIRE SERVICE ENTRANCE, TYP.
- **W13** 8"X8"X8" TEE
- **W14** 30' WIDE WATER EASEMENT CENTERED ON AS-BUILT WATER LINE AND SHALL INCLUDE HYDRANTS AND HYDRANT SERVICE LINES
- **W15** FIRE DEPARTMENT CONNECTION, REFER TO MEP PLANS FOR EXACT LOCATION AND DETAILS.

NOTE

UNDERGROUND UTILITIES, ELECTRIC, TELEPHONE AND CABLE, MUST MAINTAIN A MINIMUM CLEARANCE OF 10 FT. FROM ALL PROPOSED WATER LINES.

GRAPHIC SCALE

1 inch = 10 ft.
for sheet size 24" x 36"

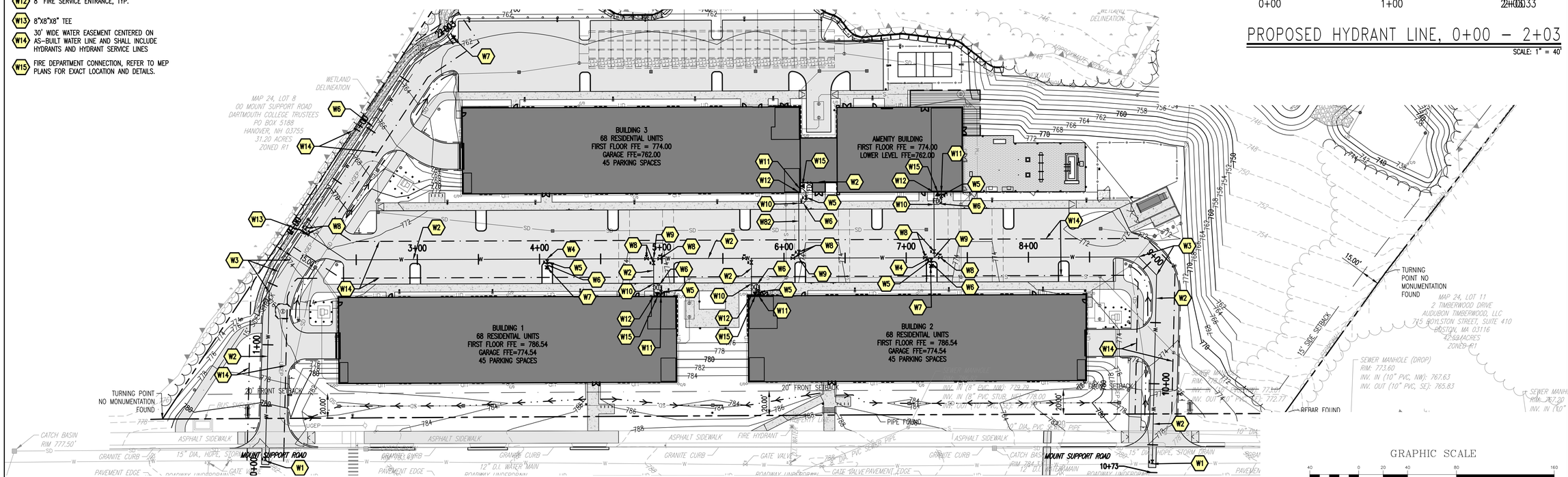

WATER PLAN VIEW, 0+00 – 10+73

SCALE: 1" = 40'

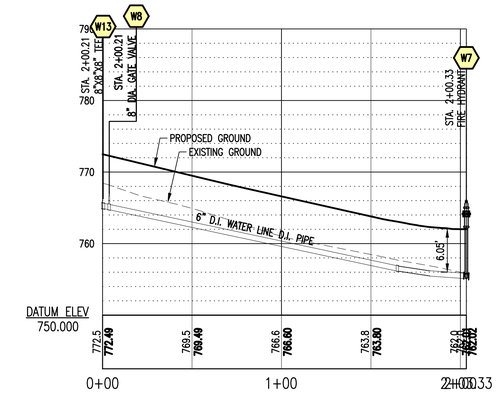

PROPOSED HYDRANT LINE, 0+00 – 2+03

SCALE: 1" = 40'

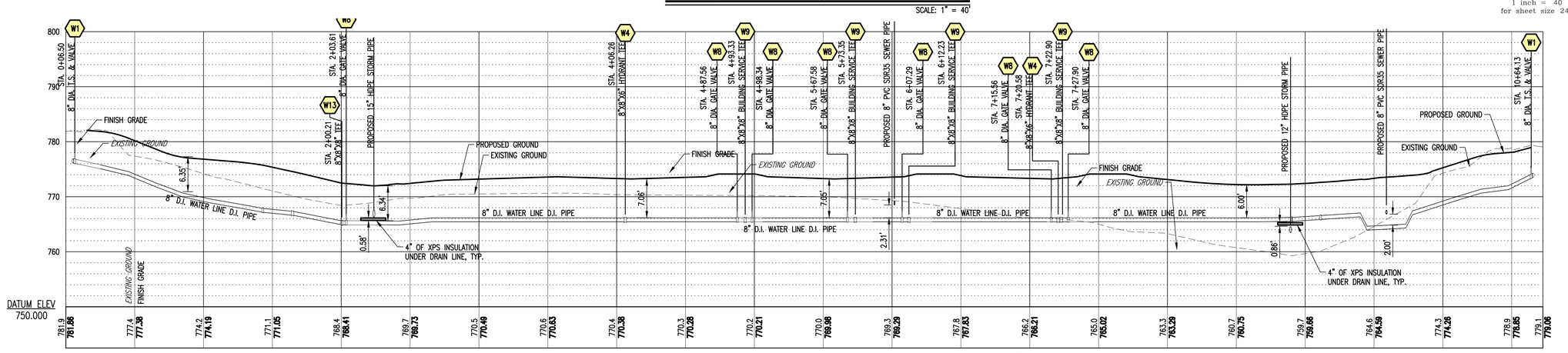

PROPOSED WATER PROFILE, STA. 0+00 – 10+73

SCALE: HORIZ. 1" = 40'
VERT.: 1" = 10'

GRAPHIC SCALE

1 inch = 40 ft.
for sheet size 24" x 36"

STATE OF NEW HAMPSHIRE
JOSHUA W. FIORE
No. 13286
LICENSED
PROFESSIONAL ENGINEER
Stamp

No.	Description	Date

ENGINEERING VENTURES PC
208 Flynn Avenue, Suite 2A, Burlington, VT 05401 • 802-863-6225
85 Mechanic Street, Suite E2-3, Lebanon, NH 03766 • 603-442-9333
414 Union Street, Schenectady, NY 12305 • 518-630-9614
www.engineeringventures.com

SPNH LEBANON NORTH, LLC
c/o SAXON PARTNERS
25 RECREATION PARK DRIVE, SUITE 204
HINGHAM, MA 02043
781-875-3300

Sheet Title: WATER PLAN & PROFILES

Project Title: MAREK 2
392 & 402 MT SUPPORT ROAD
CITY OF LEBANON, GRAFTON COUNTY, NEW HAMPSHIRE

EV Project #	22715
Drawn By:	JWF/HKW
Checked By:	NAF
Scale:	AS NOTED
Date:	09/11/2023

C3.1

S:\PROJECTS\0-2022\22715 NH 402 MT SUPPORT - SAXON\DWG\SHEET FILES\22715 C3.1 WATER PLAN & PROFILES.DWG

SEWER SCHEUDLE

S1 EXISTING SEWER MANHOLE
RIM: 773.89
INV. IN: 765.93 (8" PVC SDR35)
INV. IN: 767.63 (EX. 10" PVC)
INV. OUT: 765.83 (EX. 10" PVC)

S2 4' I.D. SEWER MANHOLE
RIM: 774.35
INV. IN: 766.28 (8" PVC SDR35)
INV. OUT: 766.18 (8" PVC SDR35)

S3 4' I.D. SEWER MANHOLE
RIM: 774.14
INV. IN: 766.78 (8" PVC SDR35)
INV. OUT: 766.68 (8" PVC SDR35)

S4 4' I.D. SEWER MANHOLE
RIM: 772.50
INV. IN: 767.23 (8" PVC SDR35)
INV. IN: 767.23 (8" PVC SDR35)
INV. OUT: 767.13 (8" PVC SDR35)

S5 4' I.D. SEWER MANHOLE
RIM: 774.29
INV. IN: 767.78 (8" PVC SDR35)
INV. IN: 767.78 (8" PVC SDR35)
INV. OUT: 767.68 (8" PVC SDR35)

S6 4' I.D. SEWER MANHOLE
RIM: 773.77
INV. IN: 768.45 (8" PVC SDR35)
INV. IN: 768.45 (8" PVC)
INV. IN: 768.45 (8" PVC SDR35)
INV. OUT: 768.35 (8" PVC SDR35)

S7 4' I.D. SEWER MANHOLE
RIM: 773.77
INV. IN: 768.87 (8" PVC)
INV. IN: 768.87 (8" PVC SDR35)
INV. OUT: 768.77 (8" PVC SDR35)

S8 BLD 1 SEWER EXIT
RIM: 769.99
INV. OUT: 769.26 (8" PVC)

S9 4' I.D. SEWER MANHOLE
RIM: 773.80
INV. IN: 768.79 (8" PVC)
INV. OUT: 768.69 (8" PVC SDR35)

S10 BLD 3 SEWER EXIT
RIM: 769.71
INV. OUT: 768.99 (8" PVC)

S11 4' I.D. SEWER MANHOLE
RIM: 773.80
INV. IN: 768.12 (6" PVC)
INV. IN: 768.12 (8" PVC)
INV. OUT: 768.02 (8" PVC SDR35)

S12 AMENITY SEWER EXIT
RIM: 769.05
INV. OUT: 768.32 (8" PVC)

S13 BLD 2 SEWER EXIT
RIM: 769.57
INV. OUT: 768.84 (8" PVC)

S14 GARAGE DRAIN EXIT
RIM: 768.60
INV. OUT: 767.87 (8" PVC SDR35)

S15 GARAGE DRAIN EXIT
RIM: 770.67
INV. OUT: 769.94 (8" PVC SDR35)

S16 6' BY 11' SAND AND OIL SEPARATOR (1,500 GAL)
RIM: 774.77
INV. IN: 769.22 (8" PVC SDR35)
INV. OUT: 768.97 (8" PVC SDR35)

S17 6' BY 11' SAND AND OIL SEPARATOR (1,500 GAL)
RIM: 774.32
INV. IN: 767.60 (8" PVC SDR35)
INV. OUT: 767.35 (8" PVC SDR35)

S18 GARAGE DRAIN EXIT
RIM: 758.06
INV. OUT: 757.33 (8" PVC SDR35)

S19 6' I.D. PUMP STATION
RIM: 761.80
INV. IN: 755.98 (8" PVC SDR35)
INV. OUT: 756.60 (2" DR11 FORCEMAIN)

S20 6' BY 11' SAND AND OIL SEPARATOR (1,500 GAL)
RIM: 761.88
INV. IN: 756.76 (8" PVC SDR35)
INV. OUT: 756.50 (8" PVC SDR35)

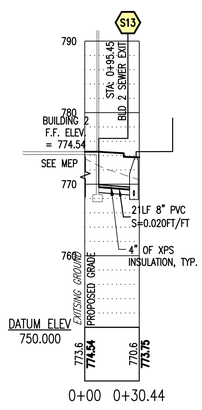

BLDG 2 SERVICE

SCALE: HORIZ. 1" = 40'
SCALE: VERT. 1" = 10'

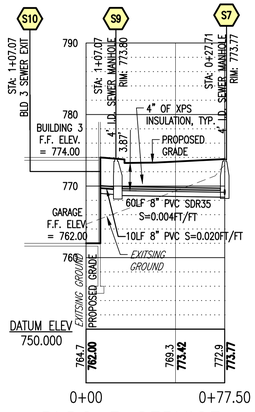

BLDG 3 SERVICE

SCALE: HORIZ. 1" = 40'
SCALE: VERT. 1" = 10'

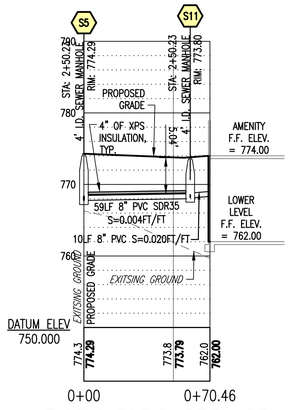

AMENITY BLDG SERVICE

SCALE: HORIZ. 1" = 40'
SCALE: VERT. 1" = 10'

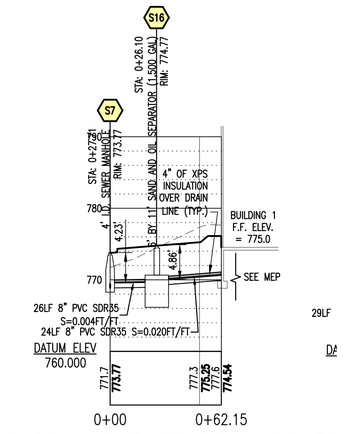

BLDG 1 GARAGE DRAIN TO S7

SCALE: HORIZ. 1" = 40'
SCALE: VERT. 1" = 10'

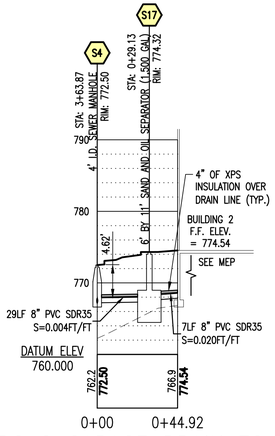

BLDG 2 GARAGE DRAIN TO S4

SCALE: HORIZ. 1" = 40'
SCALE: VERT. 1" = 10'

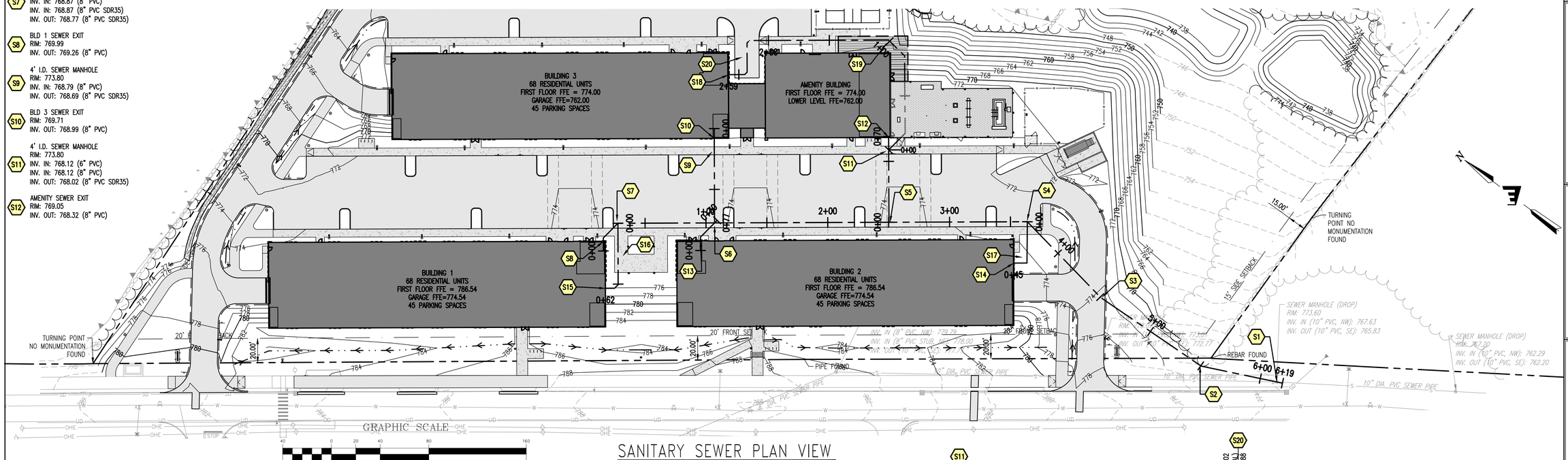

SANITARY SEWER PLAN VIEW

SCALE: 1" = 40'

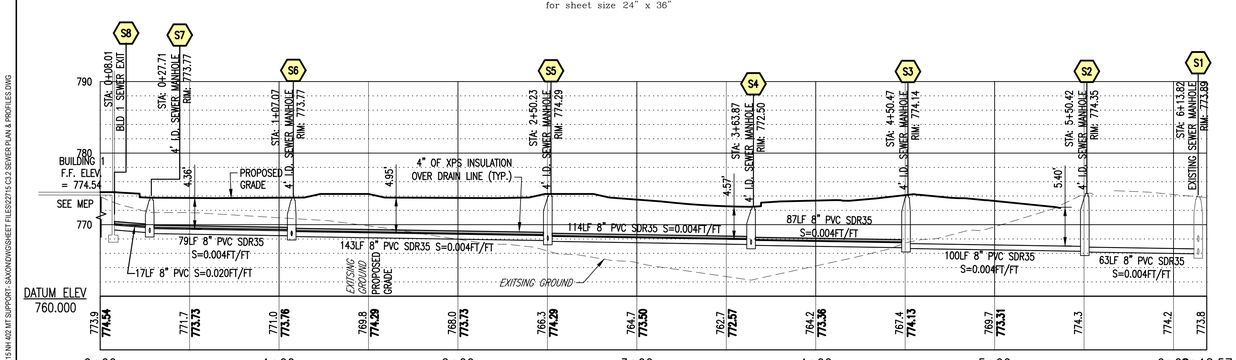

SEWER PROFILE, STA. 0+00 – 7+05

SCALE: HORIZ. 1" = 40'
VERT.: 1" = 10'

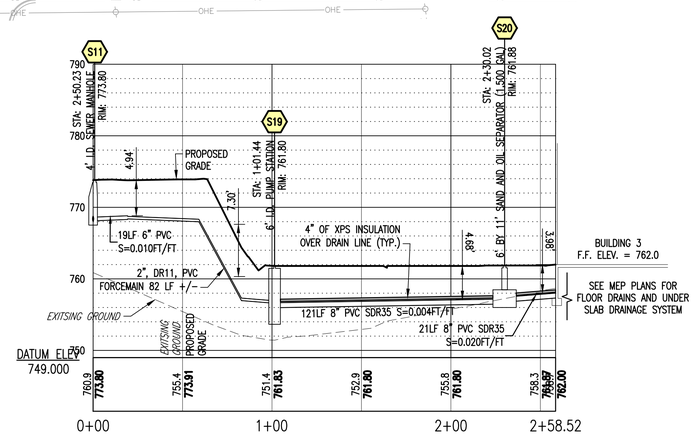

BLDG 3 GARAGE DRAIN TO S11

SCALE: HORIZ. 1" = 40'
SCALE: VERT. 1" = 10'

STATE OF NEW HAMPSHIRE
NICHOLAS A. FIORE
No. 13286
LICENSED
PROFESSIONAL ENGINEER
Stamp

No.	Description	Date

ENGINEERING VENTURES PC
208 Flynn Avenue, Suite 2A, Burlington, VT 05401 • 802-863-6225
85 Mechanic Street, Suite E2-3, Lebanon, NH 03766 • 603-442-9333
414 Union Street, Schenectady, NY 12305 • 518-630-9614
www.engineeringventures.com

SPNH LEBANON NORTH, LLC
c/o SAXON PARTNERS
25 RECREATION PARK DRIVE, SUITE 204
HINGHAM, MA 02043
781-875-3300

Sheet Title: SEWER PLAN & PROFILES

Project Title: MAREK 2
392 & 402 MT SUPPORT ROAD
CITY OF LEBANON, GRAFTON COUNTY, NEW HAMPSHIRE

EV Project #	22715
Drawn By:	JWF/HKW
Checked By:	NAF
Scale:	AS NOTED
Date:	09/11/2023

C3.2

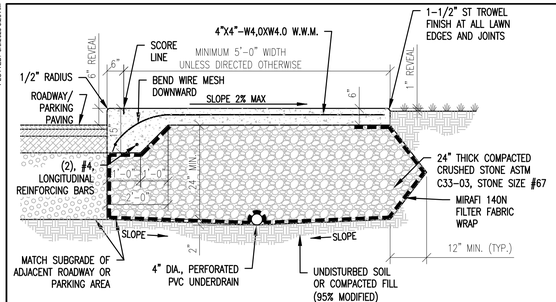

NOTES:
1. REFER TO DETAIL 1, THIS SHEET, FOR CONCRETE SPECIFICATIONS, SURFACE FINISH, JOINTS AND SEALANT REQUIREMENTS.
2. ROADWAY/PARKING PAVING AND SECTION TO MATCH EXISTING OR AS DIRECTED.

CONCRETE SIDEWALK WITH INTEGRAL CURB (3)
NOT TO SCALE

NOTES:
1. CLASS B CONCRETE SHALL HAVE:
   A. MIN. COMPRESSIVE STRENGTH OF 4000 PSI AT 28 DAYS
   B. AIR ENTRAINMENT OF 5% TO 7% BY VOLUME.
   C. MAXIMUM WATER:CEMENT RATIO= 0.60.
   D. SLUMP: 2-4 INCHES BEFORE ADDITION OF WATER REDUCER, 6-8 INCHES AFTER THE ADDITION OF WATER REDUCER.
2. PROVIDE EQUALLY SPACED CONTROL JOINTS AT SPACING AND PATTERN INDICATED ON PLANS (NOT TO EXCEED 5'-0").
3. PROVIDE EXPANSION JOINT EVERY 20'-0" MAX.

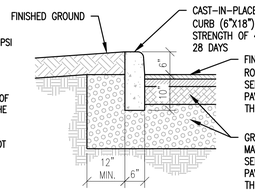

CONCRETE CURB DETAIL (4)
NOT TO SCALE

CONCRETE NOTES:
1. CLASS B CONCRETE SHALL HAVE:
   A. MIN. COMPRESSIVE STRENGTH OF 4000 PSI AT 28 DAYS
   B. AIR ENTRAINMENT OF 5% TO 7% BY VOLUME.
   C. MAXIMUM WATER:CEMENT RATIO= 0.60.
   D. SLUMP: 2-4 INCHES BEFORE ADDITION OF WATER REDUCER, 6-8 INCHES AFTER THE ADDITION OF WATER REDUCER.
2. PLACE NO CONCRETE WHEN AMBIENT TEMPERATURE IS BELOW 40 DEGREES FAHRENHEIT OR MORE THAN 90 DEGREES FAHRENHEIT.
3. NO CONCRETE SHALL BE DROPPED MORE THAN SIX FEET INSIDE A FORM.
4. MAINTAIN TEMPERATURE OF CONCRETE SURFACE AT MINIMUM 50 DEGREES FAHRENHEIT FOR 72 HOURS AFTER PLACING CONCRETE. PREHEAT ALL ENCLOSURES FOR A MINIMUM OF 2 HOURS TO PROVIDE A MIN. SURFACE TEMPERATURE OF 45 DEGREES FAHRENHEIT.
5. ALLOW TO SET AND CURE ALL THRUST BLOCKS, CONCRETE SUPPORTS, AND ANCHORS A MINIMUM OF 24 HOURS BEFORE BACKFILLING.
6. COMPLETELY CURE AND SET CONCRETE BEFORE ANY HYDROSTATIC OR LEAKAGE TESTING OF PIPELINE
7. NONSHRINK GROUT SHALL BE HALCO TRADEMARK, AS MANUFACTURED BY LEHN & FINK INDUSTRIAL PRODUCTS.
8. DO NOT PLACE ANY MORTAR OR GROUT WHEN AMBIENT TEMPERATURE IS BELOW 40 DEGREES FAHRENHEIT.
9. MORTAR FOR MANHOLES SHALL CONSIST OF THE FOLLOWING:
   A. CEMENT-TYPE II, ASTM C150.
   B. HYDRATED LIME-TYPE N, ASTM C207.
   C. SAND- ASTM C 33, FINE AGGREGATES FOR CONCRETE.
   D. WATER-CLEAN, SUITABLE FOR DRINKING.
10. MIX(BY VOLUME): 1 PART CEMENT, 1/2 PART LIME, 4 1/2 PARTS SAND.

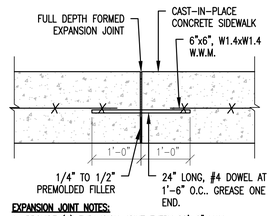

EXPANSION JOINT NOTES:
1. PROVIDE (1) EXPANSION JOINT EVERY 20'-0" MAX.
2. PROVIDE (2) EXPANSION JOINTS AT EVERY DRIVEWAY INTERSECTION
3. WHERE SIDEWALK IS ADJACENT TO CURB, BOLLARD OR OTHER HARD FEATURE, INSTALL 1/2" EXPANSION MATERIAL (FULL DEPTH OF SIDEWALK), BETWEEN FEATURE AND SIDEWALK.
4. WHERE SIDEWALK IS ADJACENT TO ENTRY/EXIT DOOR PADS WITH FROST WALL FOUNDATIONS, SIDEWALK SHALL BE DOWELED TO PAD WITH 24" LONG #4 DOWELS (CENTERED) AT 1'-6" oc (PORTION OF DOWEL IN SIDEWALK TO BE GREASED).
5. CAULK ALL EXPANSION JOINTS WITH COLOR MATCHING SILICONE CAULKING.

EXPANSION JOINT

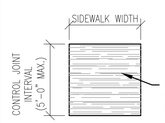

SIDEWALK FINISH NOTES:
1. TREAT WITH SILANE-SILOXANE OR EQUAL.

CONCRETE FINISH

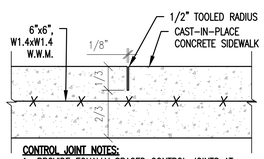

CONTROL JOINT NOTES:
1. PROVIDE EQUALLY SPACED CONTROL JOINTS AT SPACING AND PATTERN INDICATED ON PLANS (NOT TO EXCEED 5'-0").

CONTROL JOINT

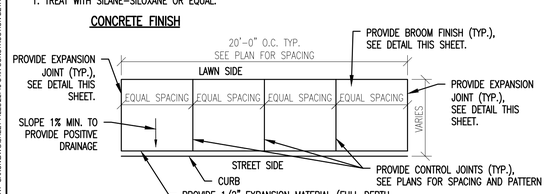

JOINT SPACING AND LAYOUT

CONC. SIDEWALK JOINTS, FINISH, AND NOTES (1)
NOT TO SCALE

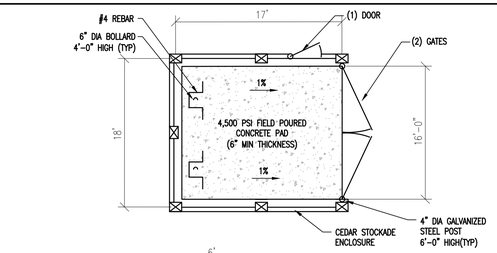

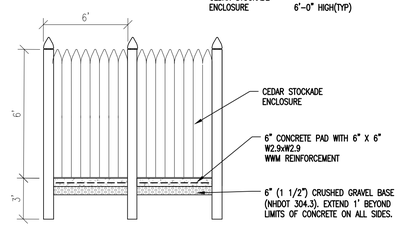

WOOD STOCKADE TRASH ENCLOSURE DETAIL (3)
NOT TO SCALE

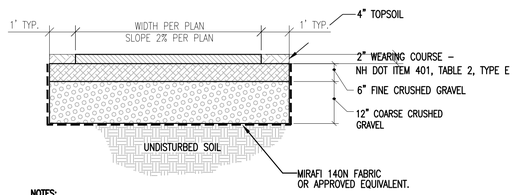

NOTES:
1. COMPACT ALL FILL MATERIAL TO 95% OPTIMUM DENSITY.

BITUMINOUS PAVED PATH DETAIL (3)
NOT TO SCALE

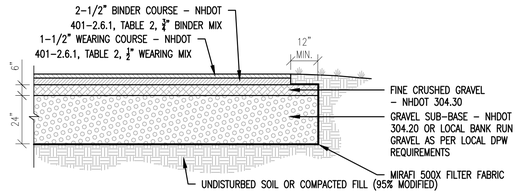

NOTES:
1. ALL SUBBASE MATERIALS SHALL BE PLACED IN 6" LIFTS AND COMPACTED TO 95% MAXIMUM DENSITY ACCORDING TO ASTM D-1557 (MODIFIED PROCTOR).
2. ROAD/PARKING LOT PAVEMENT CROSS SECTION BASED ON VTRANS STANDARD SPECIFICATIONS FOR ROAD AND BRIDGE CONSTRUCTION, ITEM 401, TABLE 2.

PAVEMENT DETAIL (1)
NOT TO SCALE

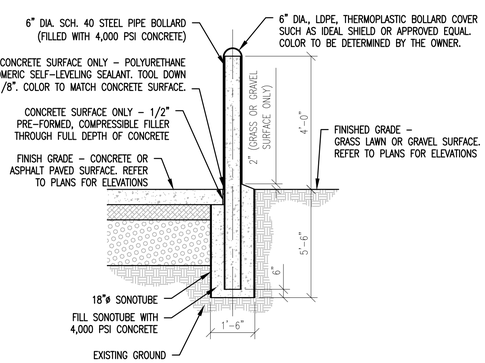

TYPICAL BOLLARD DETAIL (8)
NOT TO SCALE

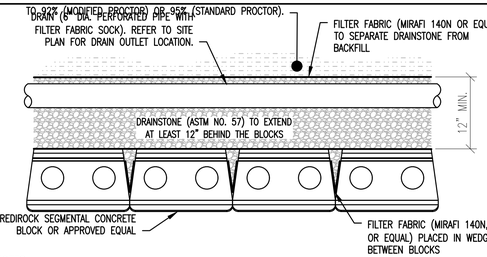

NOTES:
1. SLOPE DRAIN TO WALL ENDS, MIN. ⅛" PER FOOT, OR SLOPE TO LOW POINT AND DROP THE DRAIN UNDER THE WALL.
2. WALL DRAIN TO RUN TO RAIN GARDEN AREA. CONSTRUCTION DOCUMENT PLANS WILL BE UPDATED TO REFLECT ROUTING.

SEGMENTAL BLOCK WALL DRAIN DETAIL (1)
NOT TO SCALE

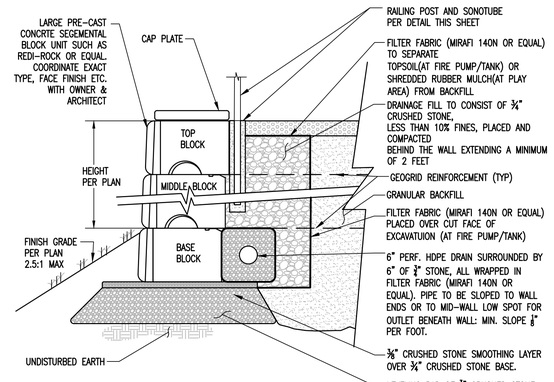

NOTES:
1. CONTRACTOR TO SUBMIT DRAWING STAMPED BY NH LICENSED PROFESSIONAL GEO-TECHNICAL ENGINEER FOR APPROVAL BY PROJECT ENGINEER AND CITY OF LEBANON.
2. STRIP ALL VEGETATION, ORGANIC SOILS AND UNSUITABLE FILL SOILS FROM THE WALL ALIGNMENT AREA.
3. BENCH CUT ALL EXCAVATED SLOPES.
4. DO NOT OVER EXCAVATE UNLESS DIRECTED TO DO SO BY THE OWNER'S SITE REPRESENTATIVE IN ORDER TO REMOVE UNSUITABLE SOIL.
5. THE OWNER'S SITE REPRESENTATIVE SHALL VERIFY FOUNDATION SOILS AS BEING COMPETENT PER THE DESIGN STANDARDS AND PARAMETERS.
6. LEVELING PAD SHALL CONSIST OF COMPACTED, ¾" CRUSHED GRAVEL, 12" THICK AND EXTENDING AT LEAST 12" TO EITHER SIDE OF THE BASE BLOCK. A SMOOTHING SURFACE OF ⅜" CRUSHED STONE MAY BE UTILIZED.
7. MINIMUM EMBEDMENT OF WALL BELOW FINISH GRADE SHALL BE AS INDICATED ON THE WALL FACE DRAWING.
8. FOLLOW APPLICABLE PROVISIONS OF THE MANUFACTURER'S INSTALLATION INSTRUCTIONS AND WRITTEN SPECIFICATIONS, ESPECIALLY WITH REGARDS TO LEVELING OF BLOCKS AND BASE.
9. DRAINAGE FILL SHALL CONSIST OF ¾" CRUSHED STONE, LESS THAN 10% FINES, PLACED AND COMPACTED BEHIND THE WALL EXTENDING A MINIMUM OF 2 FEET, OR THE LENGTH OF THE REQUIRED GEO-GRID TIE BACK, WHICHEVER IS GREATER. BEHIND THE WALL. A FILTER FABRIC SHALL BE PLACED OVER THE CUT OR FILL FACE BEHIND THE WALL AREA TO PREVENT SOIL MIGRATION INTO THE DRAINAGE MATERIAL.
10. WHERE PERFORATED HDPE DRAINS ARE USED, PROVIDE OUTLETS AT THE ENDS OF THE WALL OR AT A LOW COLLECTION POINT ALONG THE WALL. (ALTERNATIVE OUTLET METHODS MAY BE APPROVED BY THE DESIGN ENGINEER.)
11. BACKFILL AND COMPACT THE FILL MATERIAL BEHIND THE WALL AS THE WALL IS INSTALLED.
12. COMPACTION TESTS SHALL BE TAKEN AS THE WALL IS INSTALLED. THE MINIMUM NUMBER OF TESTS SHALL BE DETERMINED BY THE OWNER'S SITE REPRESENTATIVE.
13. PLACE FILTER FABRIC (MIRAFFI 140N, OR EQUAL) OVER THE DRAINAGE MATERIAL TO MINIMIZE SOIL MIGRATION FROM THE SURFACE MATERIAL INTO THE DRAINAGE MATERIAL.
14. COMPACTION SHALL BE TO 92% (MODIFIED PROCTOR) OR 95% (STANDARD PROCTOR).
15. PROVIDE LATERAL DRAINAGE SWALES TO DIRECT FLOWS AROUND THE ENDS OF THE WALL AND AWAY FROM THE WALL DURING CONSTRUCTION. DO NOT CONSTRUCT A SWALE BEHIND THE WALL AS PART OF THE FINISHED WALL. GRADE ABOVE THE WALL SO THAT WATER FLOWS OVER THE FACE OR TO A POINT AT LEAST AS FAR BEHIND THE WALL AS THE WALL HEIGHT.
16. TURF, OR SOME ACCEPTABLE FORM OF SOIL EROSION PROTECTION, SHOULD BE ESTABLISHED AT THE TOP OF THE WALL (WHERE REQUIRED) BY THE LANDSCAPE CONTRACTOR AS SOON AS THE WALL IS COMPLETED.
17. FINAL WALL ALIGNMENT SHALL BE LOCATED IN THE FIELD.
18. RECOMMENDED COMPACTION EQUIPMENT WITHIN 15 FEET OF THE BACK OF THE WALL IS AS FOLLOWS:
    0-4 FEET HAND TAMP OR VIBRATE PLATE COMPACTOR
    4-15 FEET NOTHING LARGER THAT TWO-DRUM, WALK BEHIND VIBRATORY ROLLER
    (LARGER ROLLERS CAN BE USED STATICALLY, PROVIDED LIFT SIZE DOES NOT COMPROMISE ACHIEVEMENT OF NECESSARY COMPACTION RATES.)

SEGMENTAL BLOCK WALL (1)
NOT TO SCALE

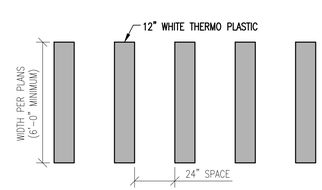

TYPICAL CROSSWALK LAYOUT (6)
NOT TO SCALE

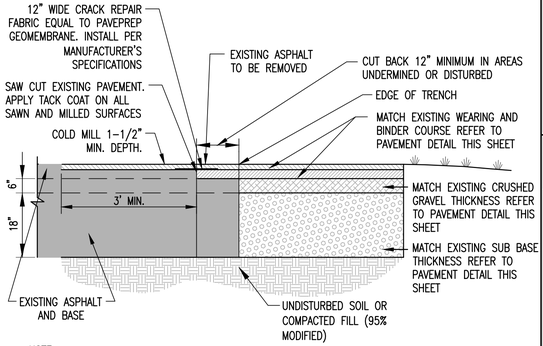

NOTE:
THIS METHOD OF PAVEMENT JOINT SHALL BE USED FOR ANY APPLICATION OR CONSTRUCTION WHERE PROPOSED PAVEMENT AND BASE WILL BE CONNECTED TO EXISTING PAVEMENT AND BASE.

TRENCH CROSS SECTION DETAIL

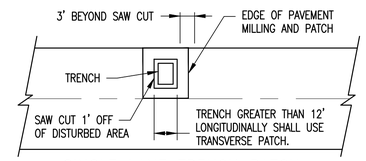

SINGLE LANE TRENCH PATCH

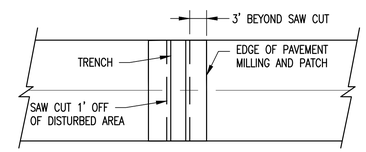

TRANSVERSE TRENCH PATCH

ASPHALT PAVEMENT TRENCH PATCH DETAIL (9)
NOT TO SCALE

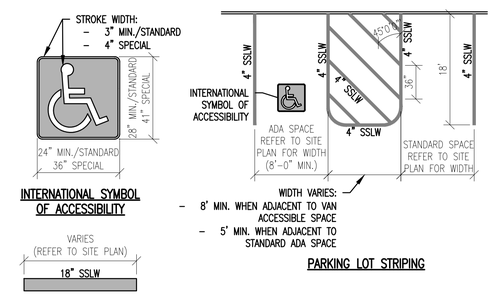

INTERNATIONAL SYMBOL OF ACCESSIBILITY

PARKING LOT STRIPING

STOP BAR

PAVEMENT MARKINGS DETAIL (5)
NOT TO SCALE

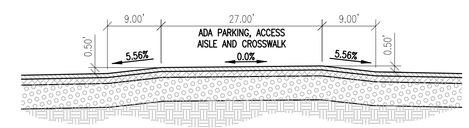

SPEED TABLE LAYOUT (6)
NOT TO SCALE

STATE OF NEW HAMPSHIRE
NICHOLAS A. FIORE
No. 13286
LICENSED
PROFESSIONAL ENGINEER
Stamp

No.	Description	Date

ENGINEERING VENTURES PC
208 Flynn Avenue, Suite 2A, Burlington, VT 05401 • 802-863-6225
85 Mechanic Street, Suite E2-3, Lebanon, NH 03766 • 603-442-9333
414 Union Street, Schenectady, NY 12305 • 518-630-9614
www.engineeringventures.com

SAXON PARTNERS
25 RECREATION PARK DRIVE, SUITE 204
HINGHAM, MA 02043
781-875-3300
802-343-6330

Sheet Title: SITE DETAILS (1 OF 2)

Project Title: MAREK 2
402 MT SUPPORT ROAD
CITY OF LEBANON, GRAFTON COUNTY, NEW HAMPSHIRE

EV Project #	22715
Drawn By:	JWF
Checked By:	NAF
Scale:	NO SCALE
Date:	09/11/2023

C4.1

PLOTTED: 9/8/2023 9:29 AM
S:\PROJECTS\2022\22715 NH 402 MT SUPPORT - SAXON\DWG\SHEET FILES\22715-C4 X CONSTRUCTION DETAILS.DWG

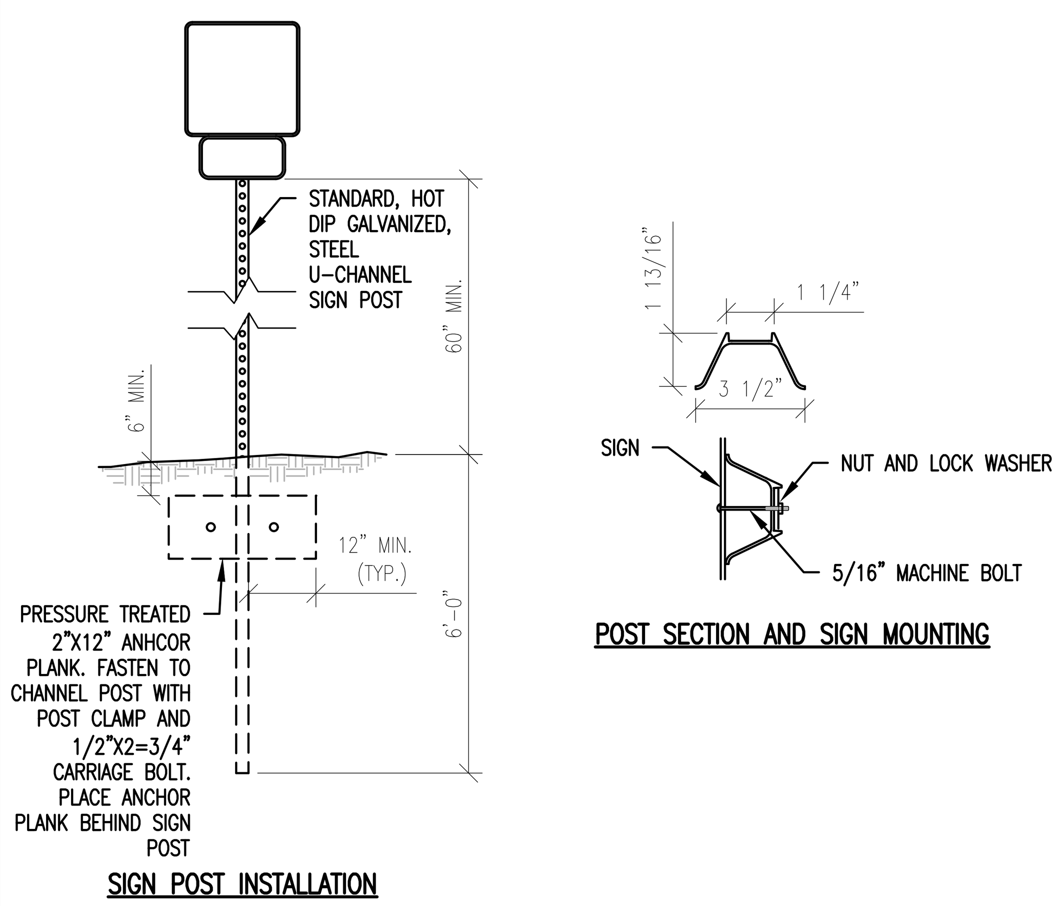

SIGN AND POST (1)

NOT TO SCALE

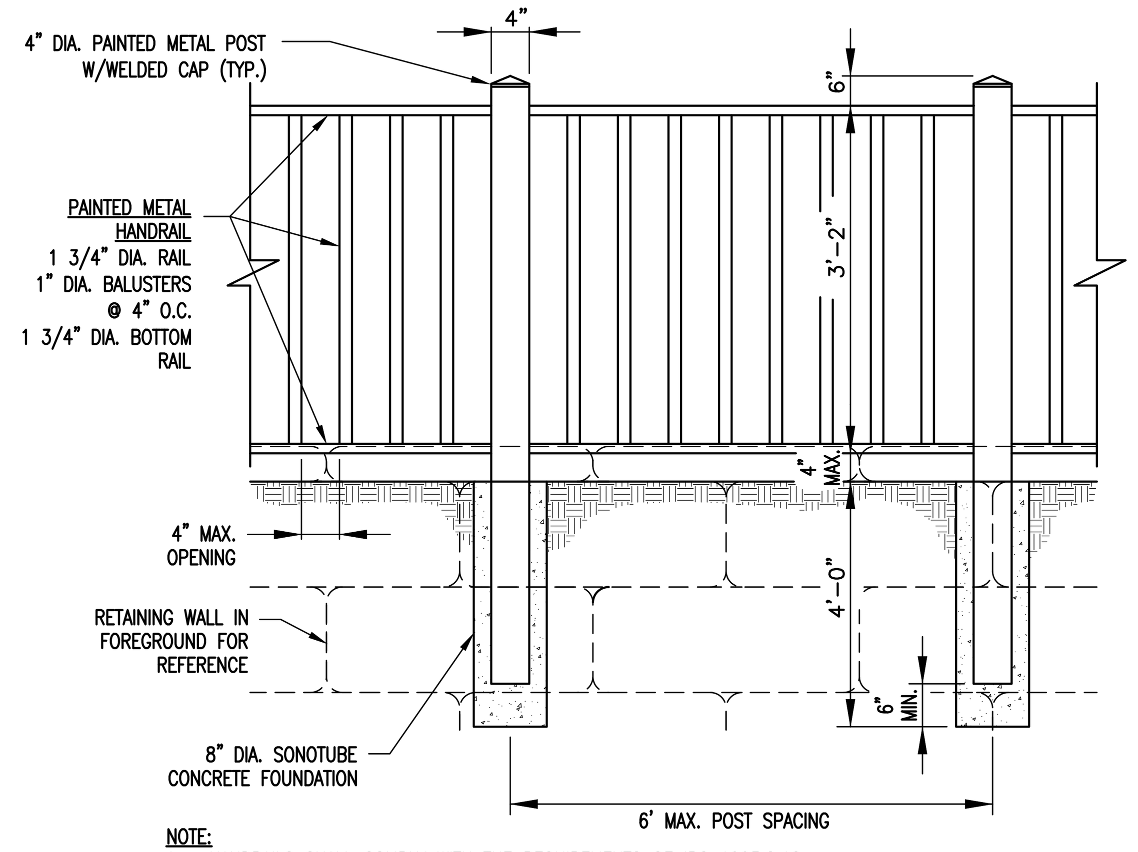

NOTE:
1. HANDRAILS SHALL COMPLY WITH THE REQUIREMENTS OF IBC 1003.2.12.
2. HANDRAILS REQUIRED FOR ALL DROPS GREATER THAN 30".
3. COORDINATE WITH OWNER AND ARCHITECT REGARDING EXACT RAIL MATERIALS, STYLES AND COLORS.

FALL PROTECTION RAILING (5)

NOT TO SCALE

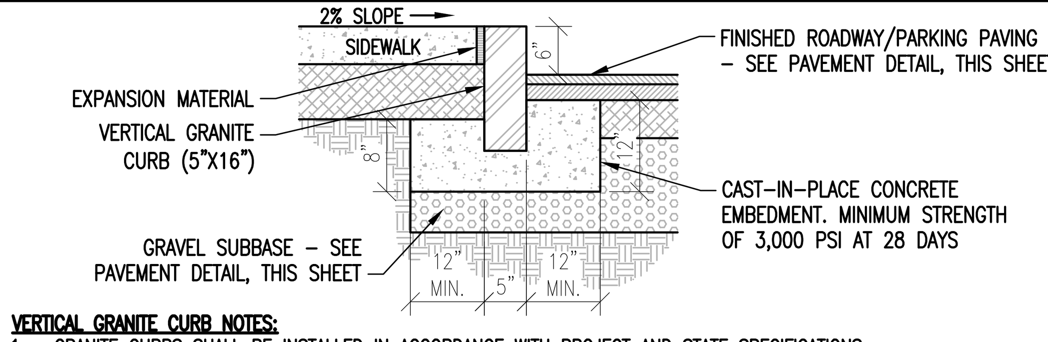

VERTICAL GRANITE CURB NOTES:
1. GRANITE CURBS SHALL BE INSTALLED IN ACCORDANCE WITH PROJECT AND STATE SPECIFICATIONS.
2. WHERE CURB IS ADJACENT TO ENTRY/EXIT DOOR PADS WITH FROST WALL FOUNDATIONS, CURB SHALL BE DOWELED TO PAD WITH 24" LONG #4 DOWELS (CENTERED) AT 1'-6"oc (PORTION OF DOWEL IN CURB TO BE GREASED).
3. WHERE CURB IS ADJACENT TO SIDEWALK, BOLLARD OR OTHER HARD FEATURE, BACKSIDE OF CURB SHALL BE SAW CUT. 1/4" EXPANSION MATERIAL (FULL DEPTH OF CURB), SHALL BE INSTALLED BETWEEN FEATURE AND CURB.

GRANITE CURB (7)

NOT TO SCALE

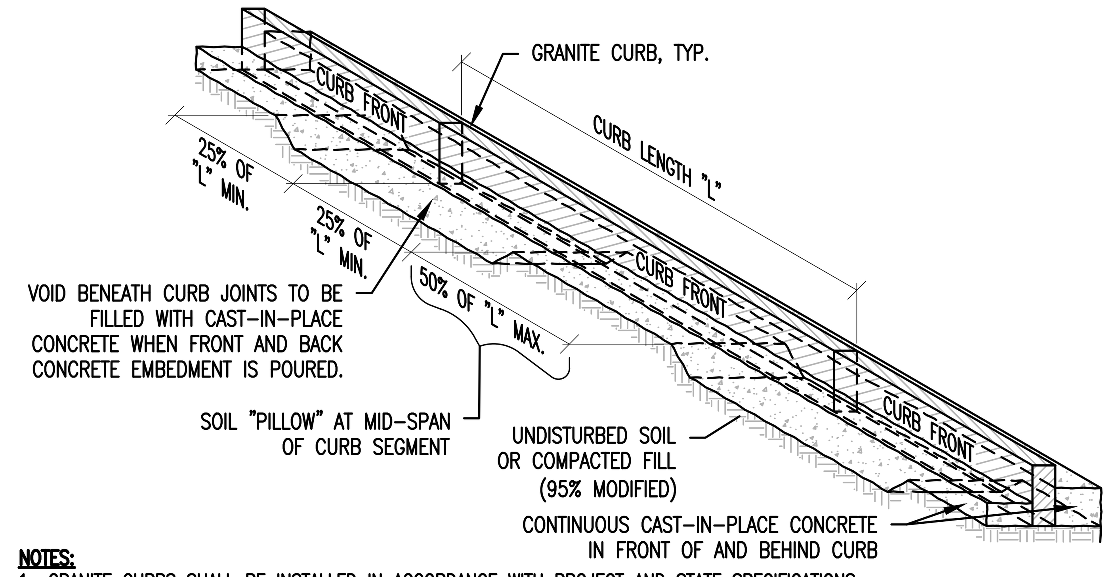

NOTES:
1. GRANITE CURBS SHALL BE INSTALLED IN ACCORDANCE WITH PROJECT AND STATE SPECIFICATIONS.
2. WHERE CURB IS ADJACENT TO SIDEWALK, BOLLARD OR OTHER HARD FEATURE, BACKSIDE OF CURB SHALL BE SAW CUT. 1/4" EXPANSION MATERIAL (FULL DEPTH OF CURB), SHALL BE INSTALLED BETWEEN FEATURE (EXCLUDING SIDEWALKS) AND CURB.
3. ROADWAY/PARKING PAVING AND SECTION TO MATCH EXISTING OR AS DIRECTED.

GRANITE CURB EMBEDMENT (8)

NOT TO SCALE

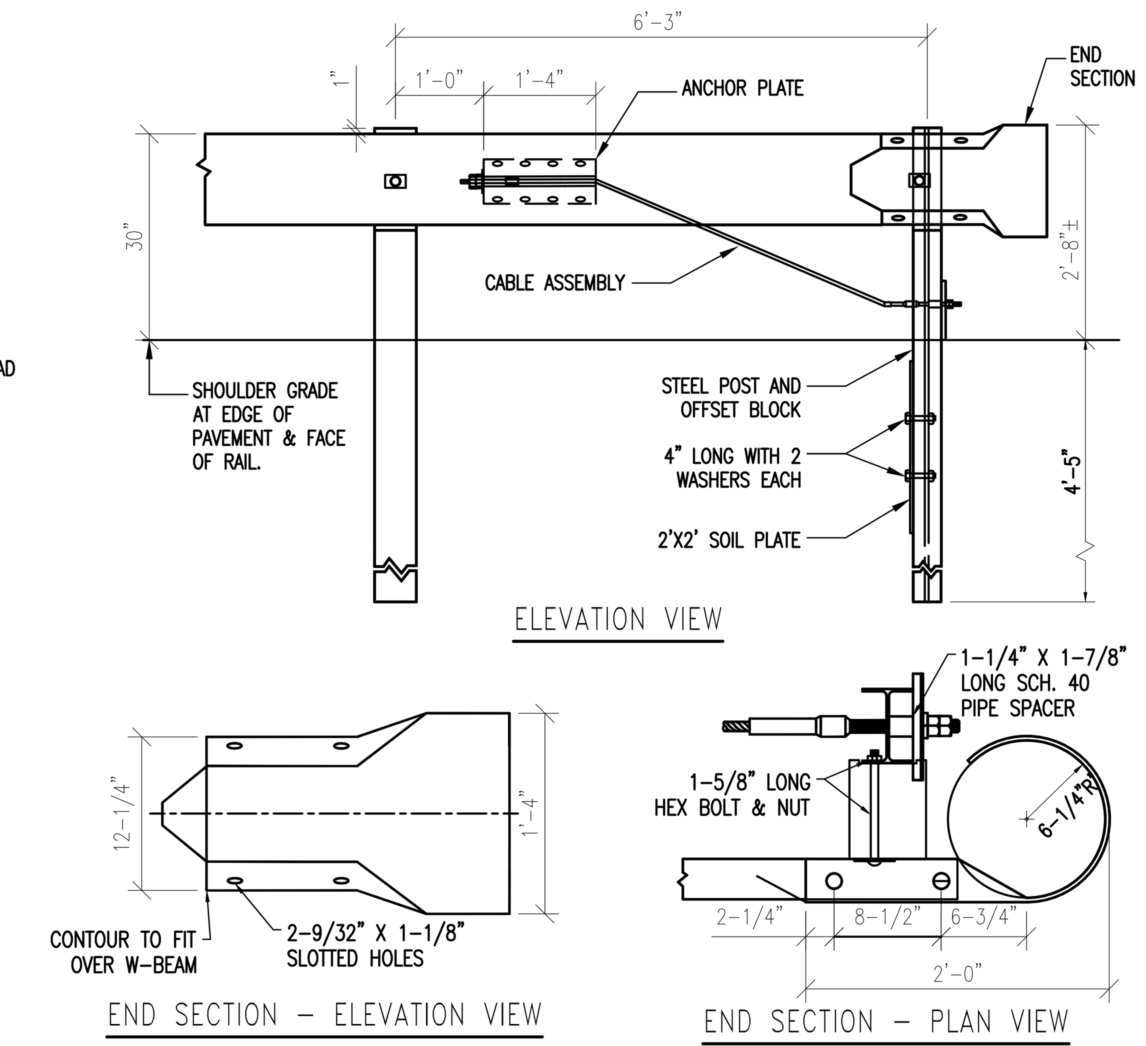

STEEL BEAM GUARD RAIL TERMINATION (10)

NOT TO SCALE

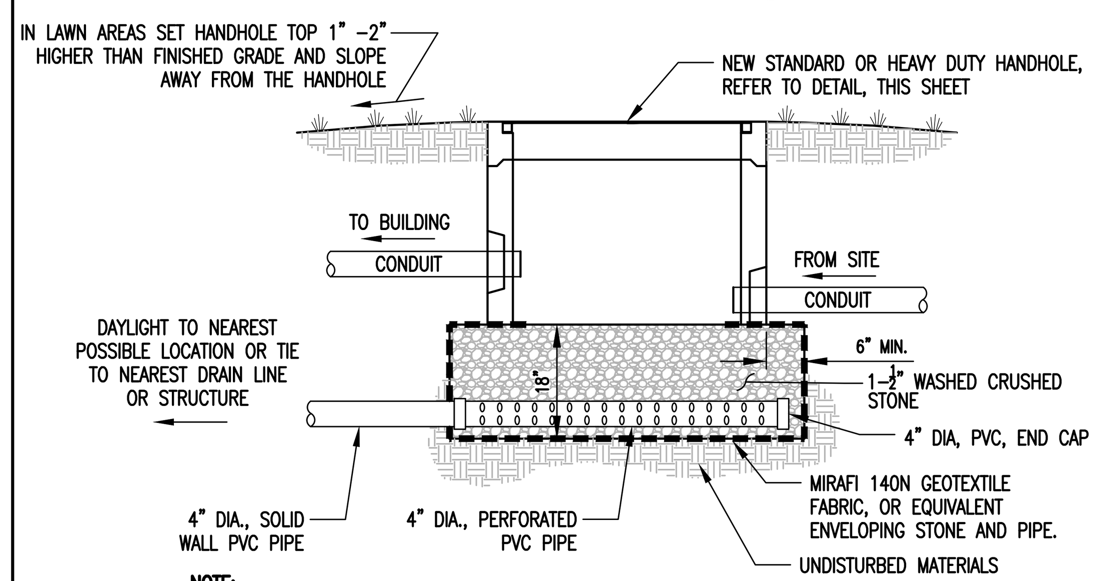

NOTE:
1. AT ENGINEERS DIRECTION THE 4" DIA. DRAIN LINE CAN BE OMITTED IF IT IS NOT FEASIBLE TO DAYLIGHT AND THERE ARE NO NEARBY DRAIN LINES OR STRUCTURES.

TYPICAL HANDHOLE INSTALLATION (2)

NOT TO SCALE

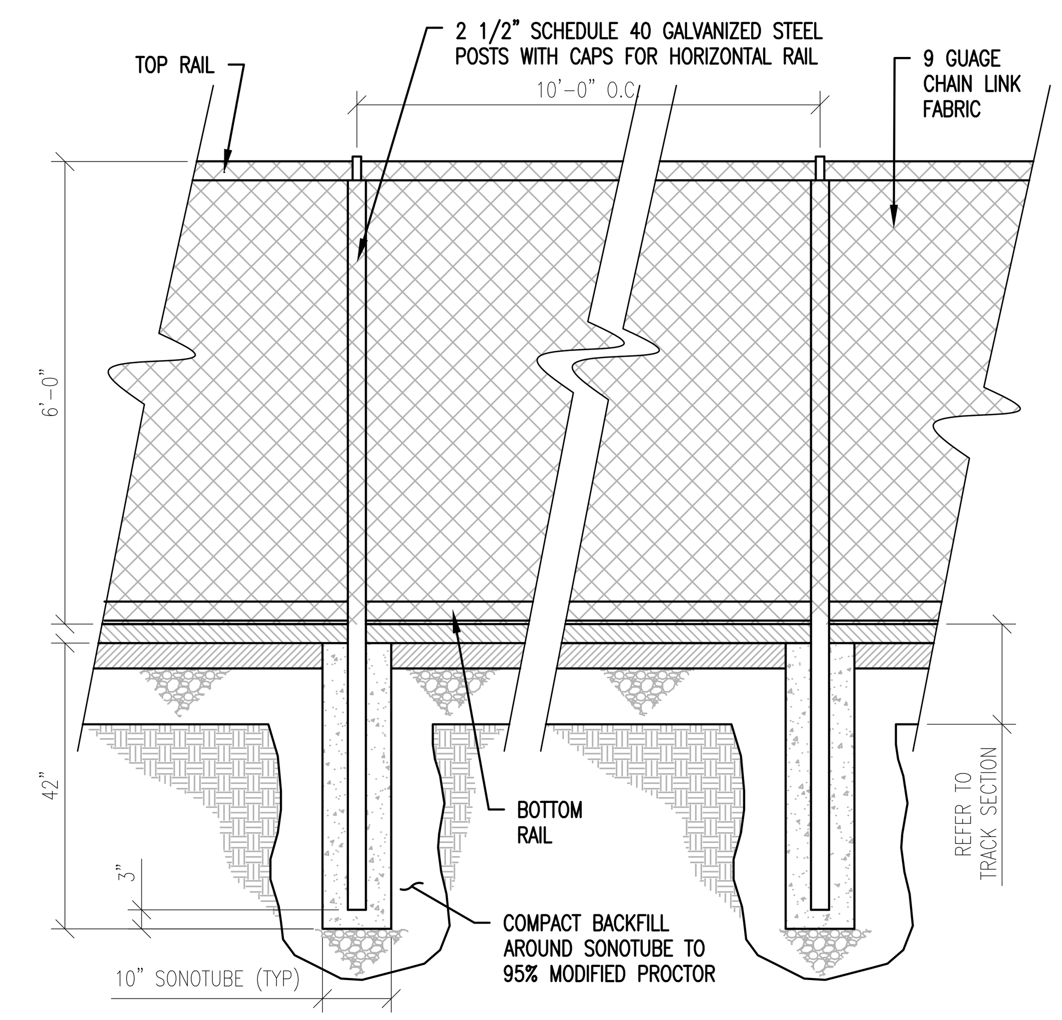

NOTES:
1. FENCE SHALL BE CONSTRUCTED TO THE HEIGHTS AND OTHER DETAILS AS SHOWN ON THE PLANS.
2. CHAIN LINK FABRIC SHALL BE 9 GAUGE HOT DIP GALVANIZED WITH A MINIMUM OF 1.2 OUNCES OF ZINC PER SQUARE FOOT OF SURFACE AREA WHEN DETERMINED IN ACCORDANCE WITH THE REQUIREMENTS OF ASTM A-90 AND SHALL HAVE A BLACK VINYL COATING. FABRIC SHALL BE WOVEN IN A 2" DIAMOND MESH. THE TOP AND THE BOTTOM SELVAGE SHALL BE KNUCKLED.
3. ALL LINE POSTS, TERMINALS, BRACES, TOP RAILS, GATE POSTS, AND GATE FRAMES SHALL BE HOT DIP GALVANIZED. GALVANIZING, EXCEPT FOR HIGH STRENGTH PIPE, SHALL BE 1.8 OUNCES OF ZINC PER SQUARE FOOT OF SURFACE AREA WHEN DETERMINED IN ACCORDANCE WITH THE REQUIREMENTS OF ASTM A-53 OR ASTM A-123. HIGH-STRENGTH PIPE SHALL BE COATED WITH A TYPE B COATING IN ACCORDANCE WITH ASTM F 1234.
4. LINE POSTS SHALL BE 2.375" HIGH STRENGTH PIPE WEIGHING 3.12 LBS./FT., 2.375" SCHEDULE 40 PIPE WEIGHING 3.65 LBS./FT, OR POSTS PROVIDING EQUIVALENT OR GREATER STRENGTH CHARACTERISTICS TO THOSE POSTS NOTED.
5. TERMINAL POSTS (END, CORNER AND PULL) SHALL BE 2.875" HIGH STRENGTH PIPE WEIGHING 4.64 LBS./FT, 2.875" SCHEDULE 40 PIPE WEIGHING 5.79 LBS/FT. OR POSTS PROVIDING EQUIVALENT OR GREATER STRENGTH CHARACTERISTICS TO THOSE POSTS NOTED.
6. GATE POSTS SHALL BE OF THE SIZE AND TYPE RECOMMENDED BY THE GATE MANUFACTURER.
7. TOP RAIL, BOTTOM RAIL AND BRACE RAILS SHALL BE 1.660" HIGH STRENGTH STEEL WEIGHING 1.82 LBS./FT., 1.660" SCHEDULE 40 PIPE WEIGHING 2.27 LBS./FT., OR SECTION PROVIDING EQUIVALENT OR GREATER STRENGTH CHARACTERISTICS TO THOSE RAIL SECTIONS NOTED. TOP RAIL SECTIONS SHALL BE A MINIMUM OF 20'-0", EXCEPT AS NECESSARY TO MAKE CONNECTIONS TO TERMINAL POSTS, AND BE FITTED OR FURNISHED WITH COUPLINGS TO PROVIDE A SATISFACTORY CONNECTION OF ADJACENT SECTIONS.
8. FITTINGS SHALL BE PRESSED STEEL, MALLEABLE IRON, OR CAST IRON OF GOOD COMMERCIAL QUALITY IN CONFORMANCE WITH ASTM F-626. STEEL FITTINGS SHALL BE GALVANIZED WITH 1.2 OUNCES OF ZINC PER SQUARE FOOT IN ACCORDANCE WITH ASTM A-153.
9. GATE FRAMES SHALL BE 1.900" HIGH STRENGTH PIPE, 1.900" SCHEDULE 40 PIPE, OR SECTION PROVIDING EQUIVALENT OR GREATER STRENGTH CHARACTERISTICS. FRAMES FOR LARGE SWING GATES SHALL BE CONSTRUCTED WITH MATERIALS OF THE SIZE AND TYPE RECOMMENDED BY THE GATE MANUFACTURER.
10. GATE AND OTHER MISCELLANEOUS HARDWARE SHALL BE STRUCTURALLY CAPABLE OF SUPPORTING GATES, FABRIC, RAILS, WIRE OR OTHER ITEMS FOR WHICH SAID HARDWARE IS PROVIDED.
11. FRAMES MAY BE ASSEMBLED BY WELDING OR WITH USE OF SUITABLE STEEL HARDWARE FITTINGS. ALL WELDED AREAS SHALL BE COVERED WITH A RUST PREVENTATIVE COATING. ALL HARDWARE USED, INCLUDING SUPPORTS, ROLLERS AND LATCHES, SHALL BE OF ADEQUATE DESIGN AND STRENGTH TO PROVIDE SATISFACTORY OPERATION OF THE GATE(S). INTERIOR BRACING SHALL BE PROVIDED AS RECOMMENDED BY THE MANUFACTURER.
12. GATE FABRIC SHALL BE OF THE SAME TYPE, SIZE OF MESH, GAGE SIZE OF WIRE AND SELVAGE AS THAT SPECIFIED FOR FENCE.
13. LATCHES, HINGES, STOPS AND KEEPERS SHALL BE GALVANIZED STEEL. THE GALVANIZED COATING SHALL BE 1.2 OUNCES OF ZINC PER SQUARE FOOT UNLESS OTHERWISE SPECIFIED.
14. SINGLE GATE LATCHES SHALL BE FORK TYPE, GRAVITY DROP BAR TYPE WITH POSITIVE LOCKING FEATURES OR PLUNGER BAR TYPE OF FULL GATE HEIGHT.
15. KEEPERS SHALL BE PROVIDED FOR EACH GATE LEAF OVER FIVE (5) FEET WIDE. GATE KEEPERS SHALL CONSIST OF A MECHANICAL DEVICE FOR SECURING THE FREE END OF THE GATE WHEN IN FULL OPEN POSITION.
16. GATE HINGES SHALL BE OF ADEQUATE STRENGTH FOR THE GATE, AND SHALL HAVE LARGE BEARING SURFACES FOR CLAMPING OR BOLTING IN POSITION. HINGE ACTION SHALL BE SUCH THAT GATES MAY BE EASILY OPENED AND CLOSED BY ONE PERSON. HINGES SHALL PROVIDE FOR FULL 180 DEGREE SWING OF GATE LEAF.
17. PADLOCKS SHALL BE FURNISHED BY THE OWNER.

CHAINLINK FENCE (6)

NOT TO SCALE

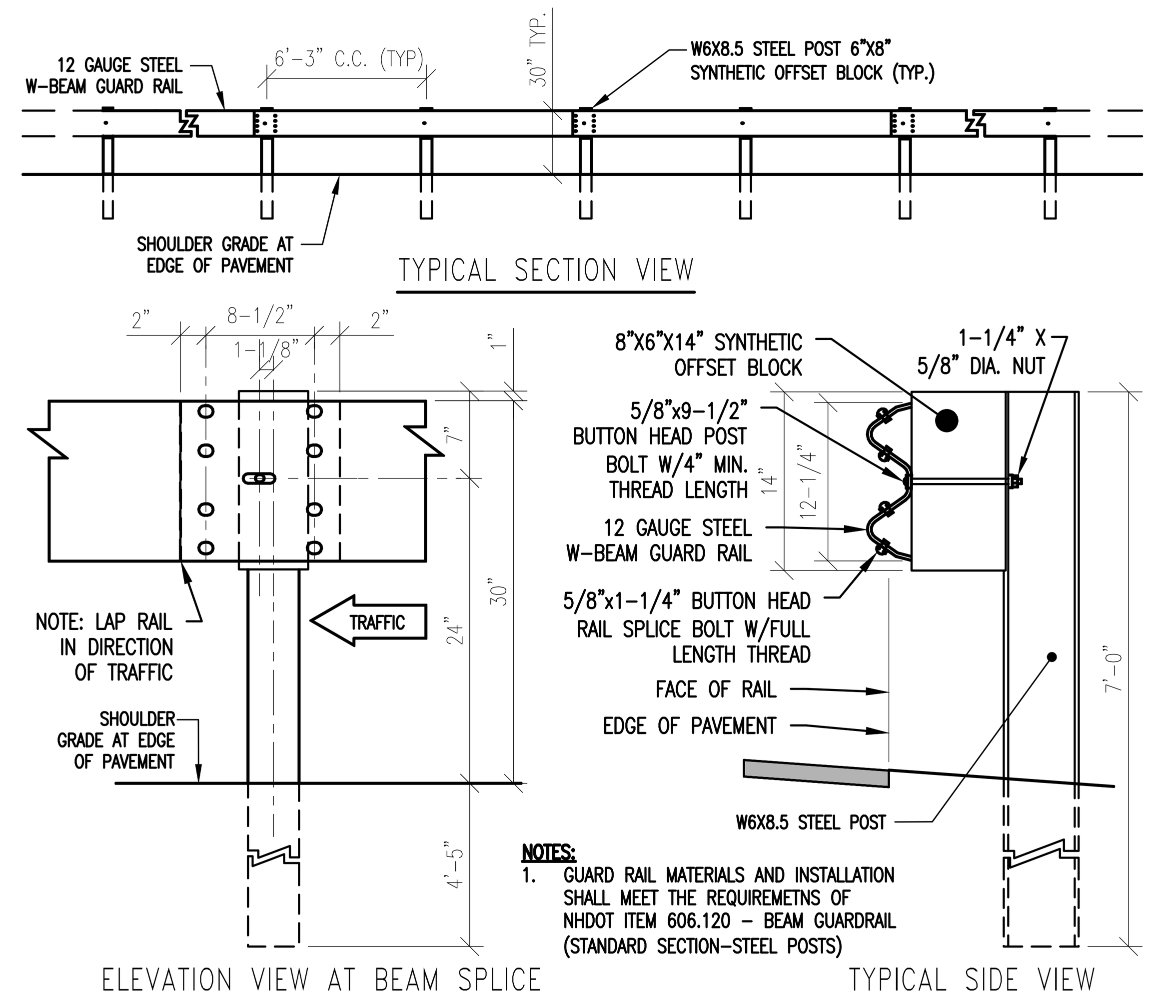

NOTES:
1. GUARD RAIL MATERIALS AND INSTALLATION SHALL MEET THE REQUIREMETNS OF NHDOT ITEM 606.120 - BEAM GUARDRAIL (STANDARD SECTION-STEEL POSTS)

STEEL BEAM GUARD RAIL (9)

NOT TO SCALE

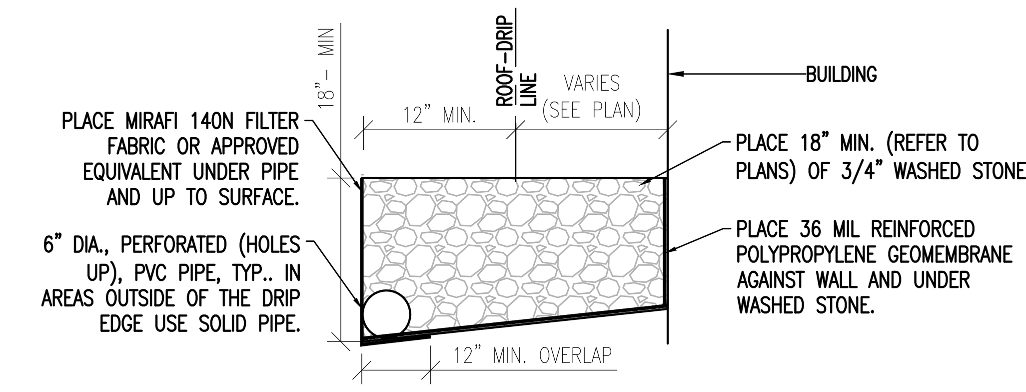

TYPICAL DRIP EDGE (11)

NOT TO SCALE

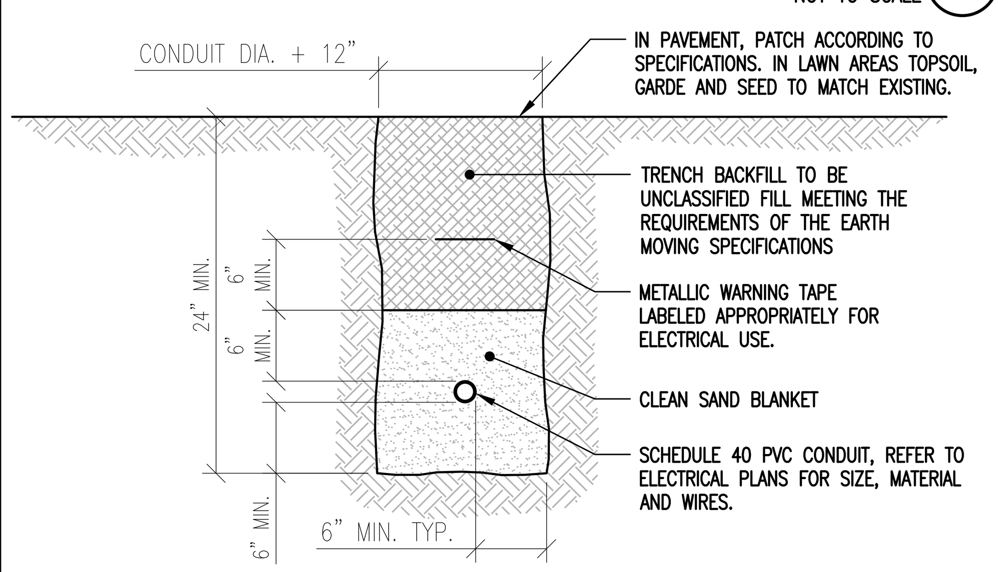

LIGHTING CONDUIT TRENCH (3)

NOT TO SCALE

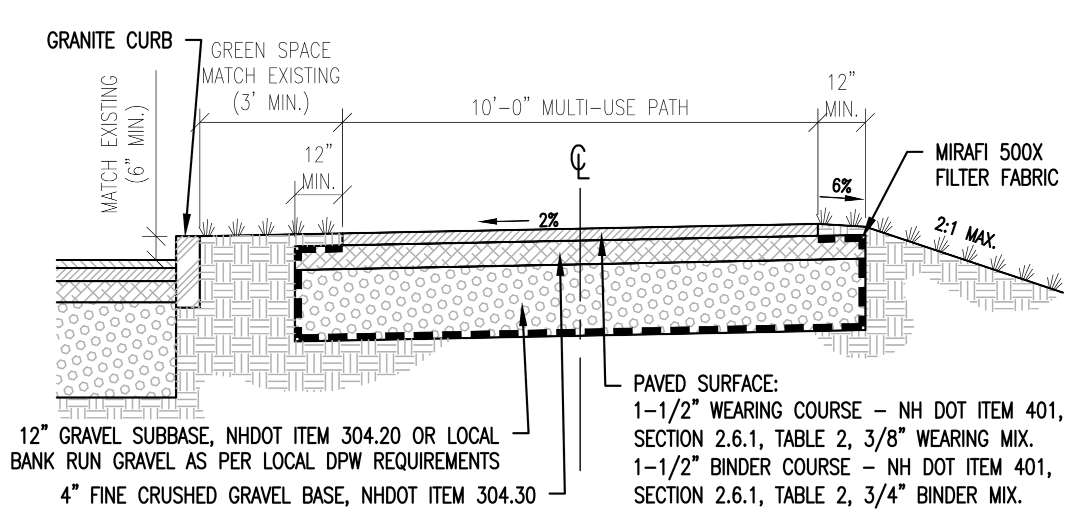

MOUNT SUPPORT ROAD MULTI-USE PATH (12)

NOT TO SCALE

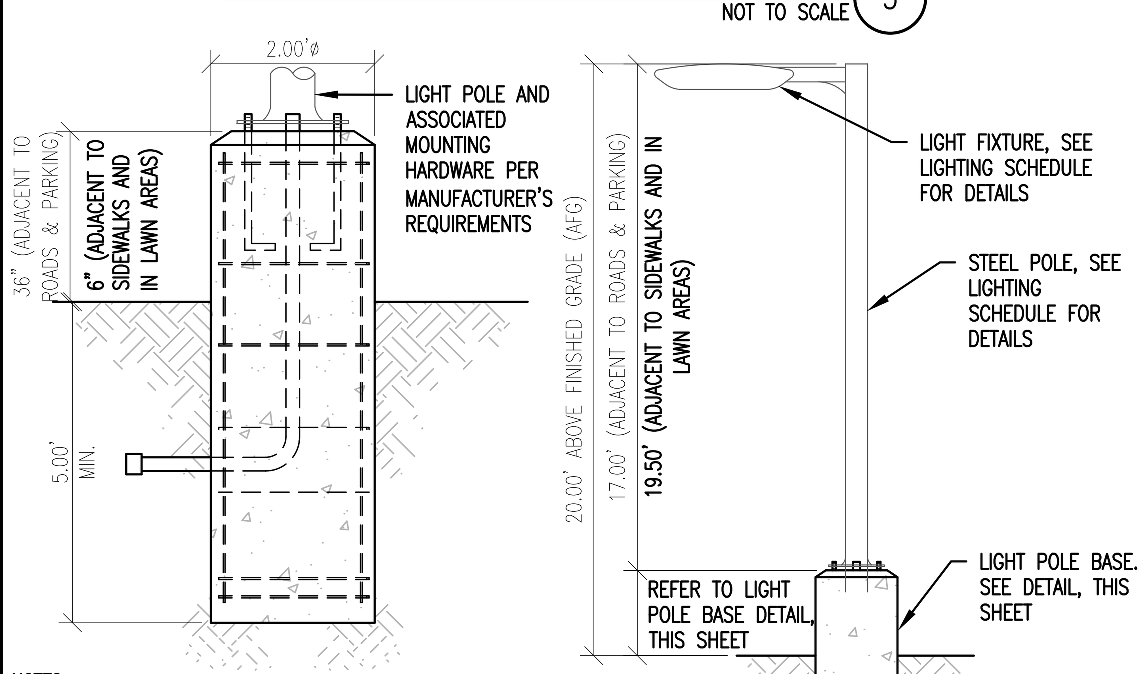

NOTES:
1. CONCRETE: 4,000 P.S.I. AFTER 28 DAYS.
2. REINFORCING: (4) - #4'S, 1 @ EACH CORNER.
3. 1" CHAMFER @ TOP EDGE.
4. CONDUIT & ANCHOR BOLTS PLACED AS RE-QUIRED; PROVIDED BY ELECTRICAL CONTRACTOR.
5. CONCRETE TO HAVE AIR ENTRAINING AGENT.

TYPICAL LIGHT POLE BASE

NOTE:
1. PROPOSED POLES SHALL MEET 140 MPH SUSTAINED WINDS

TYPICAL LIGHT POLE

LIGHT POLE (4)

NOT TO SCALE

..\References\Images\Bike Stall.jpg

EXAMPLE OF RACK "IN-USE"

NOTES:
1. THIS DETAIL HAS BEEN PROVIDED FOR REFERENCE PURPOSES ONLY. THESE BIKE RACKS SHALL BE LOCATED WITHIN THE PARKING GARAGES AND SHALL BE PROVIDED AND INSTALLED BY THE BUILDING CONTRACTOR. AS SUCH THEY ARE NOT PART OF THE SITE CONTRACTORS RESPONSIBILITIES.

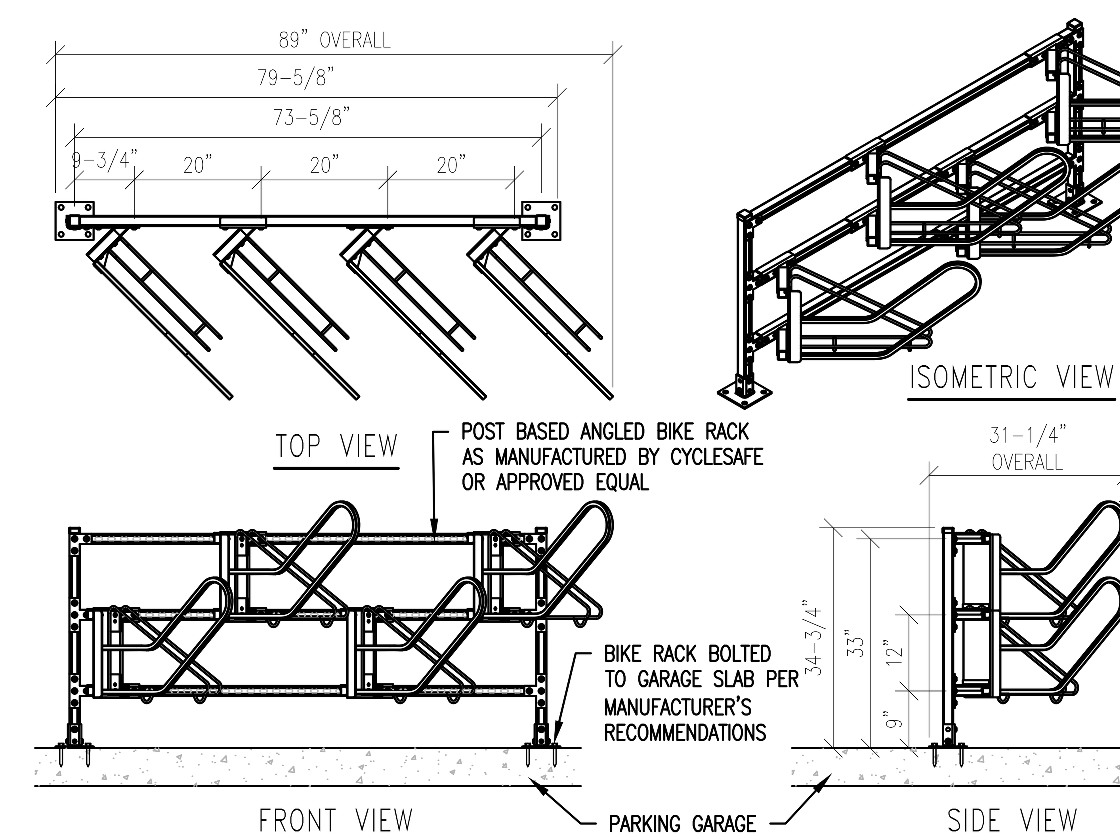

BIKE RACK (13)

NOT TO SCALE

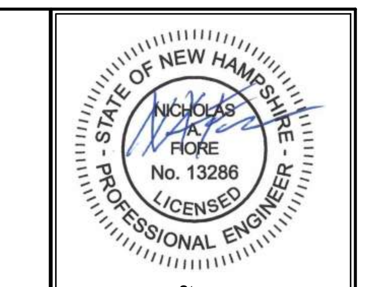

Stamp

No.	Description	Date

ENGINEERING VENTURES PC
208 Flynn Avenue, Suite 2A, Burlington, VT 05401 • 802-863-6225
85 Mechanic Street, Suite E2-3, Lebanon, NH 03766 • 603-442-9333
414 Union Street, Schenectady, NY 12305 • 518-630-9614
www.engineeringventures.com

SAXON PARTNERS
25 RECREATION PARK DRIVE, SUITE 204
HINGHAM, MA 02043
781-875-3300
802-343-6330

Sheet Title: SITE DETAILS (2 OF 2)

Project Title: MAREK 2
402 MT SUPPORT ROAD
CITY OF LEBANON, GRAFTON COUNTY, NEW HAMPSHIRE

EV Project #	22715
Drawn By:	JWF
Checked By:	NAF
Scale:	NO SCALE
Date:	09/11/2023

C4.2

S:\PROJECTS\0-2022\22715 NH 402 MT SUPPORT- SAXON\DWG\SHEET FILES\22715 C4.X CONSTRUCTION DETAILS.DWG

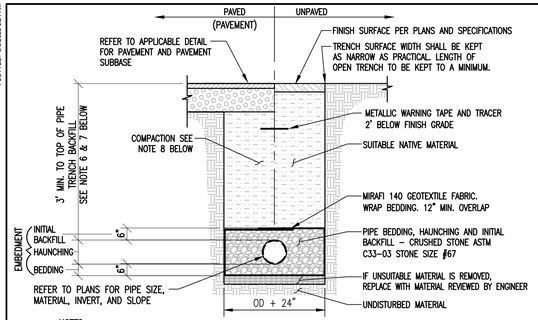

NOTES:

1. UNLESS OTHERWISE NOTED, ASSUME CLASS "C" SOILS. PERFORM ALL EXCAVATIONS TO OSHA REQUIREMENTS.
2. BEDDING TO PROVIDE A FIRM, STABLE, CONTINUOUS AND UNIFORM SUPPORT FOR THE FULL LENGTH OF PIPE.
3. PROVIDE 6" OF COVER OVER DRAIN PIPE IN PAVED AREAS AND 5' OF COVER OVER PIPE IN UNPAVED AREAS. OTHERWISE, REFER TO INSULATION OVER SHALLOW DRAIN LINE DETAIL.
4. WHEN APPLICABLE INSTALL PIPE WITH BELL ENDS DOWN SLOPE. PREVENT SEDIMENT FROM ENTERING NEW STORM DRAIN SYSTEM DURING CONSTRUCTION.
5. NO MECHANICAL TAMPERS SHALL BE USED DIRECTLY OVER PIPE TO INSURE PIPE IS NOT DAMAGED.
6. TRENCH BACKFILL MATERIAL, INCLUDING ROADWAY LOCATIONS, SHALL BE NATURAL MATERIALS EXCAVATED FROM THE TRENCH DURING CONSTRUCTION AND FREE OF UNSUITABLE MATERIALS AS DEFINED BY NHDOT 203.2.7, WNY-WQ-704.09(j), AND THE EARTHWORK SPECIFICATIONS INCLUDED ON THESE PLANS.
7. LEDGE, ROCK, BOULDERS AND LARGE STONES SHALL BE REMOVED TO PROVIDE A MINIMUM CLEARANCE OF SIX INCHES BELOW AND ON EACH SIDE OF ALL PIPES.
8. BACKFILL MATERIALS SHALL BE COMPACTED, IN 12" LAYERS, TO 92% OF MODIFIED PROCTOR (ASTM 1557) TO WITHIN 3 FEET OF FINISHED GRADE. IN AREAS UNDER ROADWAYS, DRIVES, AND PARKING THE UPPER 3 FEET SHALL BE COMPACTED, IN 6" LAYERS, TO 95% MODIFIED PROCTOR (ASTM 1557) AND IN LAWN OR OTHER UNDEVELOPED SPACE THE UPPER 3 FEET SHALL BE COMPACTED TO 92% MODIFIED PROCTOR.

TYPICAL STORM DRAIN TRENCH (1)

NOT TO SCALE

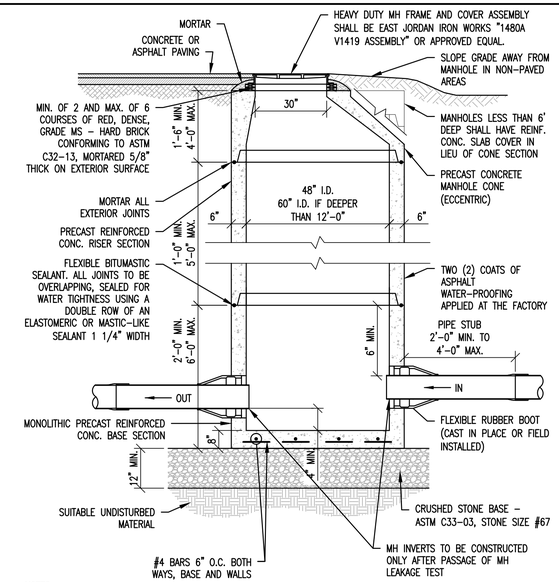

NOTES:

1. PROVIDE SMOOTH SWEEPING TRANSITIONS BETWEEN INVERTS OF INTERSECTING PIPE.
2. IF DEPTH OF MANHOLE IS 6 FT. OR LESS FROM RIM TO CENTERLINE INVERT, THEN A FLAT TOP WILL BE INSTALLED. IF DEPTH OF MANHOLE FROM RIM TO CENTERLINE INVERT IS MORE THAN 6 FT., THEN AN ECCENTRIC CONICAL TOP WILL BE INSTALLED.
3. INVERTS AND SHELVES SHALL BE PLACED AFTER TESTING.
4. MANHOLE AND COVER SHALL BE DESIGNED FOR H20 LOADING.

DRAINAGE MANHOLE (CONE SECTION) (4)

NOT TO SCALE

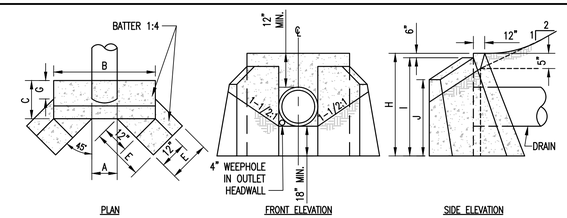

PIPE Ø INCHES	A		B		C		E		F		G		H		I		J	
	2:1 SLOPE DIMENSIONS																	
in.	ft	in	ft	in	ft	in	ft	in	ft	in	ft	in	ft	in	ft	in	ft	in
12	1	2	4	1	1	11	1	2	1	9	0	9	3	6	3	0	3	0
15	1	6	4	4	2	0	1	6	1	9	0	8	3	9	3	3	3	1
18	1	9	4	7	2	0	1	9	1	10	0	8	4	1	3	7	3	3
24	2	3	5	1	2	6	2	4	1	11	0	7	4	6	4	0	3	6
30	2	9	5	7	2	3	2	11	1	11	0	6	5	0	4	6	3	10
36	3	3	6	1	2	5	3	7	2	0	0	6	5	6	5	0	4	1

NOTE:

1. CONCRETE SHALL BE CLASS "A" CONCRETE
2. STEEL REINFORCING SHALL BE AS SPECIFIED BY THE MANUFACTURER

PRECAST CONCRETE HEADWALL (6)

NOT TO SCALE

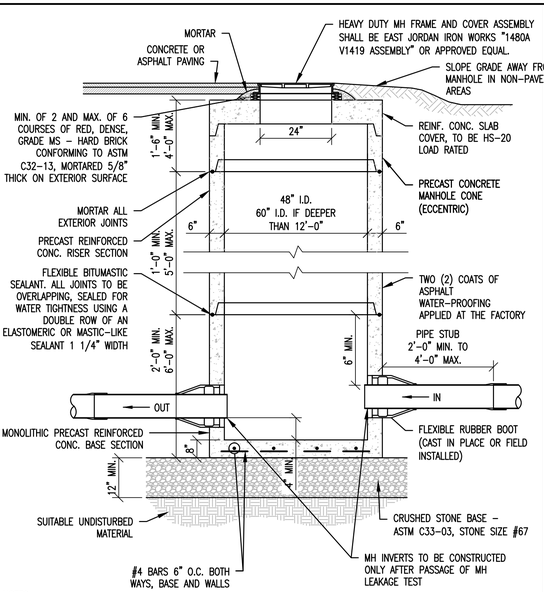

NOTES:

1. PROVIDE SMOOTH SWEEPING TRANSITIONS BETWEEN INVERTS OF INTERSECTING PIPE.
2. IF DEPTH OF MANHOLE IS 6 FT. OR LESS FROM RIM TO CENTERLINE INVERT, THEN A FLAT TOP WILL BE INSTALLED. IF DEPTH OF MANHOLE FROM RIM TO CENTERLINE INVERT IS MORE THAN 6 FT., THEN AN ECCENTRIC CONICAL TOP WILL BE INSTALLED.
3. INVERTS AND SHELVES SHALL BE PLACED AFTER TESTING.
4. MANHOLE AND COVER SHALL BE DESIGNED FOR H20 LOADING.

DRAINAGE MANHOLE DETAIL (FLAT TOP) (9)

NOT TO SCALE

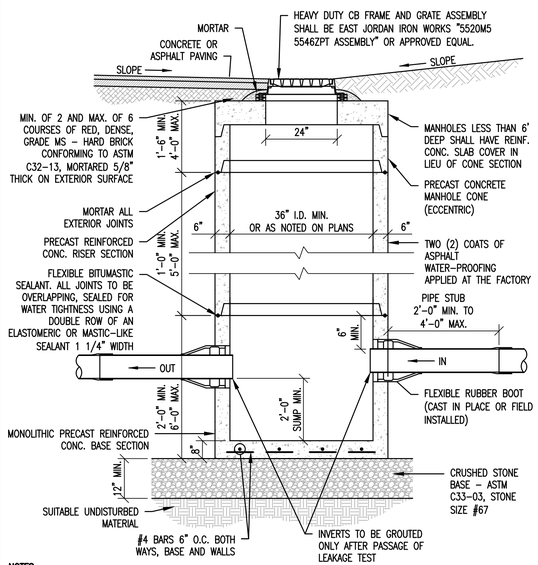

NOTES:

1. IF DEPTH OF MANHOLE IS 6 FT. OR LESS FROM RIM TO CENTERLINE INVERT, THEN A FLAT TOP WILL BE INSTALLED. IF DEPTH OF MANHOLE FROM RIM TO CENTERLINE INVERT IS MORE THAN 6 FT., THEN AN ECCENTRIC CONICAL TOP WILL BE INSTALLED.
2. CATCH BASIN AND GRATE SHALL BE DESIGNED FOR H20 LOADING.

CATCH BASIN (2)

NOT TO SCALE

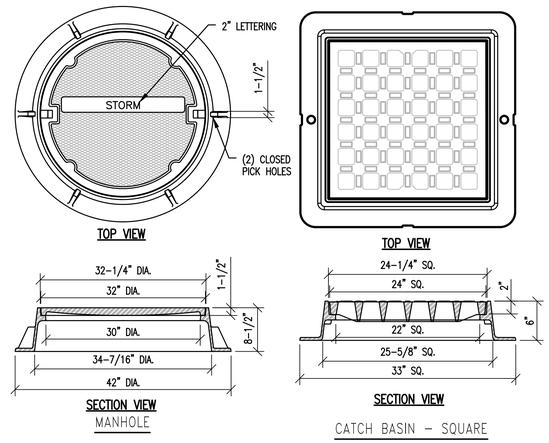

NOTES:

1. ALL DIMENSIONS SHOWN HERE ARE NOMINAL.
2. COVER SHALL BE HEAVY DUTY (H-20) LOAD RATED.
3. CATCH BASIN (SQUARE) FRAME AND GRATE ASSEMBLY SHALL BE EAST JORDAN IRON WORKS FRAME 5546Z (PRODUCT NUMBER 00554611 (4 FLANGE) OR 00554613 (3 FLANGE)) AND GRATE 5520M5 (PRODUCT NUMBER 00552060) OR APPROVED EQUAL.
3. CATCH BASIN (ROUND) FRAME AND GRATE ASSEMBLY SHALL BE EAST JORDAN IRON WORKS "2266Z 1040M3 SET" (PRODUCT NUMBER 00211033205) OR APPROVED EQUAL.
3. CATCH BASIN – (VANED) FRAME AND GRATE ASSEMBLY SHALL BE EAST JORDAN IRON WORKS "5520M8 5521Z ASSEMBLY" (PRODUCT NUMBER 00552081A2) OR APPROVED EQUAL. FRAME AND GRATE VANE DIRECTION SHALL BE "LEFT" OR "RIGHT" DEPENDING ON THE DIRECTION OF FLOW AT EACH BASIN.
4. MANHOLE (MH) FRAME AND COVER ASSEMBLY SHALL BE EAST JORDAN IRON WORKS "1480A V1419 ASSEMBLY" OR APPROVED EQUAL.

STORMWATER MH COVERS AND CB GRATES (5)

NOT TO SCALE

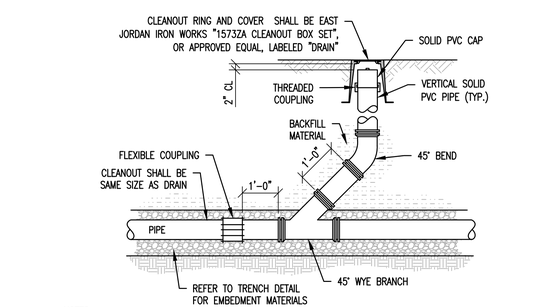

NOTES:

1. ALL CLEANOUT RISER PIPE AND FITTINGS SHALL BE 4" DIAMETER WHEN THE DRAIN PIPE IS LESS THAN 6" IN DIAMETER AND 6" DIAMETER FOR ALL DRAIN PIPE 6" IN DIAMETER AND GREATER.
2. CLEANOUTS SHALL BE PROVIDED AT EACH HORIZONTAL CHANGE IN DIRECTION OF THE DRAIN PIPE GREATER THAN 45 DEGREES AND AS SHOWN ON THE PLANS.
3. CLEANOUT RISER ASSEMBLY PIPE MATERIAL SHALL MATCH DRAIN PIPE MATERIAL.

DRAIN CLEANOUT (7)

NOT TO SCALE

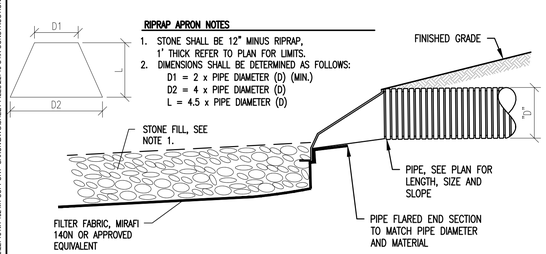

RIPRAP APRON NOTES

1. STONE SHALL BE 12" MINUS RIPRAP, 1' THICK REFER TO PLAN FOR LIMITS.
2. DIMENSIONS SHALL BE DETERMINED AS FOLLOWS:
   D1 = 2 x PIPE DIAMETER (D) (MIN.)
   D2 = 4 x PIPE DIAMETER (D)
   L = 4.5 x PIPE DIAMETER (D)

FLARED END SECTION W/STONE APRON (3)

NOT TO SCALE

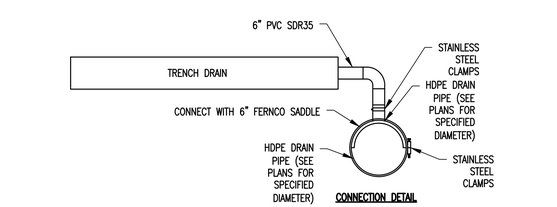

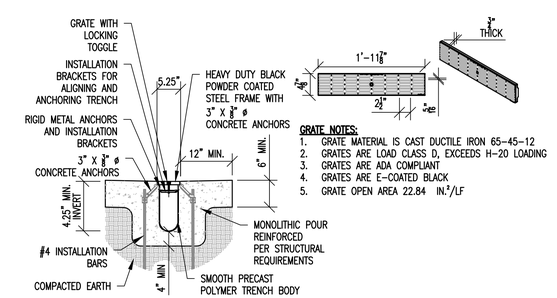

GRATE NOTES:

1. GRATE MATERIAL IS CAST DUCTILE IRON 65-45-12
2. GRATES ARE LOAD CLASS D, EXCEEDS H-20 LOADING
3. GRATES ARE ADA COMPLIANT
4. GRATES ARE E-COATED BLACK
5. GRATE OPEN AREA 22.84 IN.²/LF

TRENCH DRAIN (8)

NOT TO SCALE

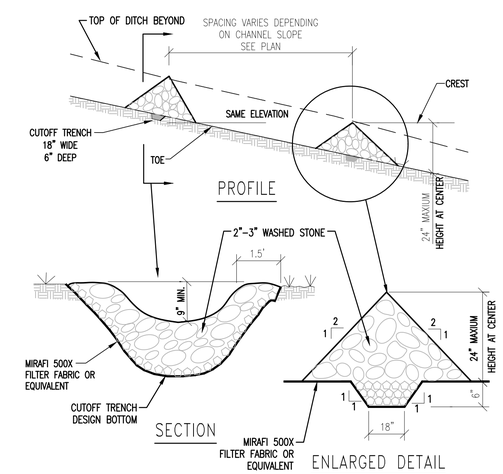

NOTES:

1. STONE WILL BE PLACED ON A FILTER FABRIC FOUNDATION TO THE LINES, GRADES AND LOCATIONS SHOWN IN PLANS.
2. SET SPACING OF CHECK DAMS TO ASSUME THAT THE ELEVATIONS OF THE CREST OF THE DOWNSTREAM DAM IS AT THE SAME ELEVATION OF THE TOE OF THE UPSTREAM DAM.
3. EXTEND THE STONE A MINIMUM OF 1.5 FEET BEYOND THE DITCH BANKS TO PREVENT CUTTING AROUND THE DAM.
4. PROTECT THE CHANNEL DOWNSTREAM OF THE LOWEST DAM FROM SCOUR AND EROSION WITH STONE OR LINER AS APPROPRIATE.
5. ENSURE THAT CHANNEL APPURTENANCES SUCH AS CULVERT ENTRANCES BELOW CHECK DAMS ARE NOT SUBJECT TO DAMAGE OR BLOCKAGE FROM DISPLACED STONES.
6. REMOVE ACCUMULATED SEDIMENT BEHIND CHECK DAM WHEN 1/2 THE HEIGHT OF THE DAM. REPLACE STONES AS NECESSARY.

STONE CHECK DAM DETAIL (10)

NOT TO SCALE

STATE OF NEW HAMPSHIRE
NICHOLAS A. FIORE
No. 13286
LICENSED
PROFESSIONAL ENGINEER
Stamp

No.	Description	Date

ENGINEERING VENTURES PC
208 Flynn Avenue, Suite 2A, Burlington, VT 05401 • 802-863-6225
85 Mechanic Street, Suite E2-3, Lebanon, NH 03766 • 603-442-9333
414 Union Street, Schenectady, NY 12305 • 518-630-9614
www.engineeringventures.com

SAXON PARTNERS
25 RECREATION PARK DRIVE, SUITE 204
HINGHAM, MA 02043
781-875-3300
802-343-6330

Sheet Title: STORMWATER DETAILS (1 OF 3)

Project Title: MAREK 2
402 MT SUPPORT ROAD
CITY OF LEBANON, GRAFTON COUNTY, NEW HAMPSHIRE

EV Project #	22715
Drawn By:	JWF
Checked By:	NAF
Scale:	NO SCALE
Date:	09/11/2023

C4.3

PLOTTED: 9/8/2023 8:21 AM
S:\PROJECTS\0-2022\22715 NH 402 MT SUPPORT - SAXON\DWG\SHEET FILES\22715 C4.X CONSTRUCTION DETAILS.DWG

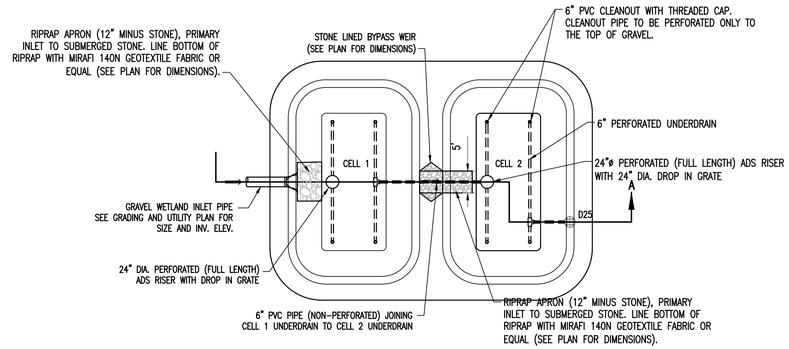

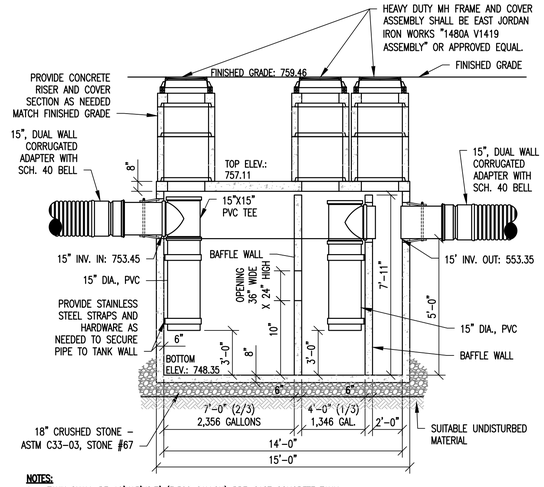

NOTES:

1. TANK SHALL BE 10'X15'X8.7' (3,500 GALLON) PRE-CAST CONCRETE TANK.
2. TANK SHALL BE DESIGNED FOR H-20 LOADING.
3. THE EXTERIOR OF THE PRE-CAST CONCRETE STRUCTURE SHALL RECEIVE TWO COATS OF ASPHALT SEAL COATING AT THE FACTORY.
4. JOINTS BETWEEN THE CONCRETE SECTIONS SHALL BE SEALED BY BUTYL MASTIC (AASHTO M-198).
5. PIPE PENETRATIONS SHALL BE SEALED BY FLEXIBLE WATERTIGHT BOOTS WITH STAINLESS STEEL BANDS.
6. THE WATER QUALITY UNIT AND RISERS SHALL BE FILLED WITH WATER AND SUBJECTED TO A 24 HOUR HYDROSTATIC LEAKAGE TEST. NO LEAKAGE WILL BE ALLOWED DURING THE TEST PERIOD.
7. AN ALTERNATE VACUUM LEAKAGE TEST PRIOR TO BACKFILLING IS ALSO ACCEPTABLE. THE VACUUM TEST WILL REQUIRE THE INSTALLED VAULT AND RISERS TO HOLD A VACUUM PRESSURE OF NEGATIVE 5 INCHES MERCURY FOR 10 MINUTES WITH NO LOSS/GAIN.
8. IT IS THE RESPONSIBILITY OF THE CONTRACTOR TO PROVIDE A WATERTIGHT STRUCTURE.
9. SHOP DRAWINGS OF THE WATER QUALITY UNIT AND COMPONENTS SHALL BE PROVIDED TO THE ENGINEER FOR REVIEW AND APPROVAL PRIOR TO FABRICATION.

SEDIMENT FOREBAY

NOT TO SCALE (4)

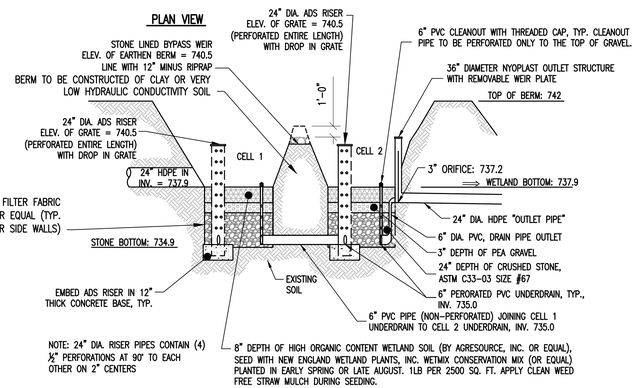

SECTION A-A (EXAGGERATED VIEW)

NOTE:

1. GRAVEL WETLAND CONSTRUCTION AND DESIGN SHALL BE IN ACCORDANCE WITH "UNHSC SUBSURFACE GRAVEL WETLAND DESIGN SPECIFICATIONS".

GRAVEL WETLAND

GRAVEL WETLAND (1)

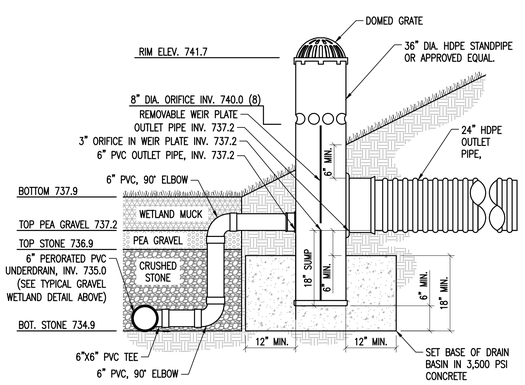

GRAVEL WETLAND OUTLET RISER (D25)

NOT TO SCALE (2)

STATE OF NEW HAMPSHIRE
NICHOLAS A. FIORE
No. 13286
LICENSED
PROFESSIONAL ENGINEER
Stamp

No.	Description	Date

ENGINEERING VENTURES PC
208 Flynn Avenue, Suite 2A, Burlington, VT 05401 • 802-863-6225
85 Mechanic Street, Suite E2-3, Lebanon, NH 03766 • 603-442-9333
414 Union Street, Schenectady, NY 12305 • 518-630-9614
www.engineeringventures.com

SAXON PARTNERS
25 RECREATION PARK DRIVE, SUITE 204
HINGHAM, MA 02043
781-875-3300
802-343-5330

Sheet Title: STORMWATER DETAILS (2 OF 3)

Project Title: MAREK 2
402 MT SUPPORT ROAD
CITY OF LEBANON, GRAFTON COUNTY, NEW HAMPSHIRE

EV Project #	22715
Drawn By:	JWF
Checked By:	NAF
Scale:	NO SCALE
Date:	09/11/2023

C4.4

PLOTTED: 9/9/2023 8:21 AM
S:\PROJECTS\0-2022\22715 NH 402 MT SUPPORT - SAXON\DWG\SHEET FILES\22715-C4.X CONSTRUCTION DETAILS.DWG

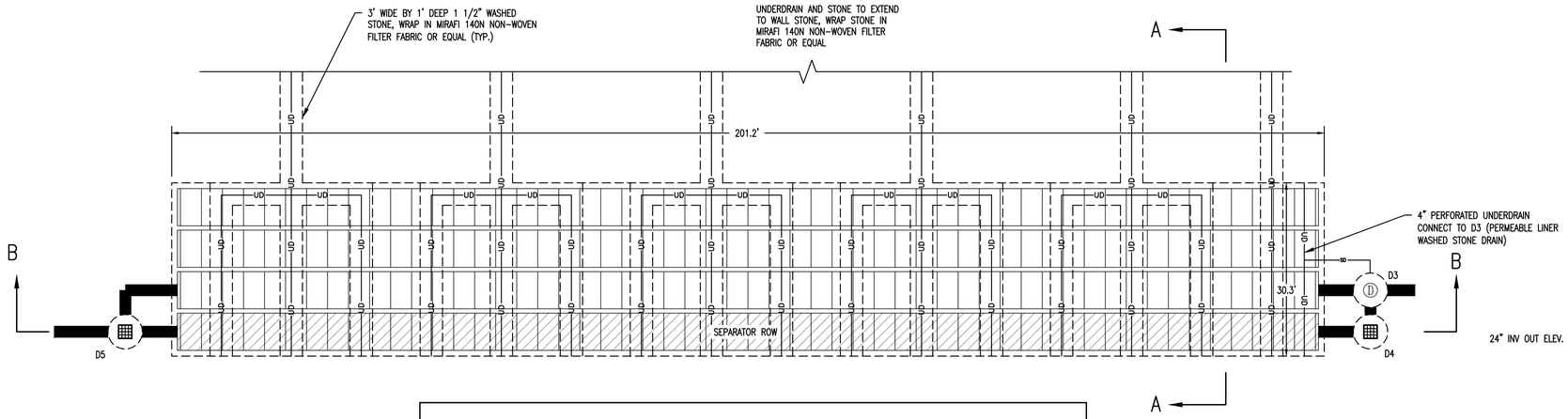

STONE BED: 201.2' LONG x 30.3' WIDE x 5.8' DEEP
CHAMBERS: 4 ROWS X 54 CHAMBERS/ROW = 216 CHAMBERS TOTAL

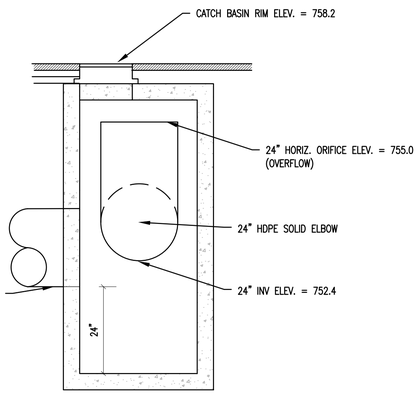

CULTEC SEPARATOR ROW INLET(D4)
NOT TO SCALE (2)

SECTION VIEW A

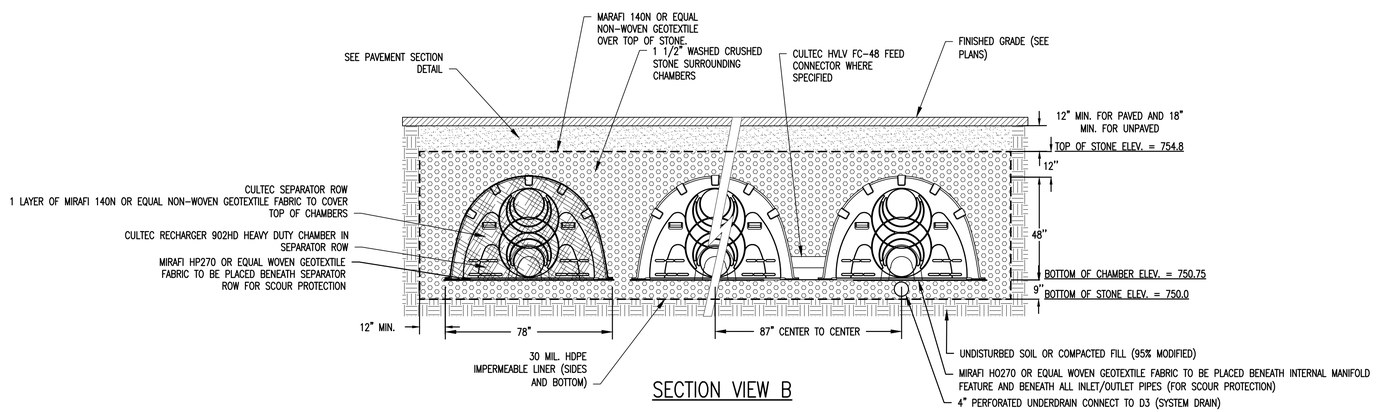

SECTION VIEW B

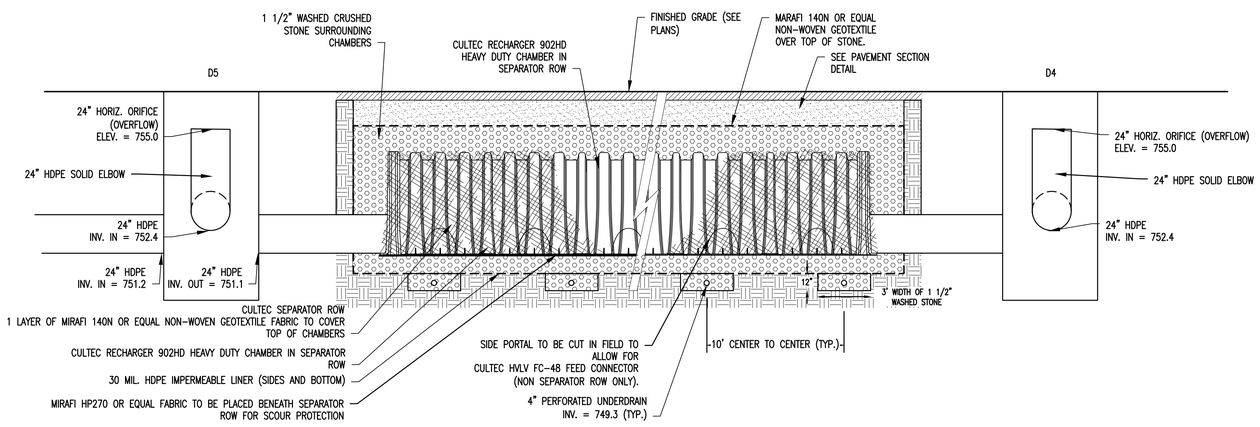

CULTEC CHAMBER SYSTEM
NOT TO SCALE (1)

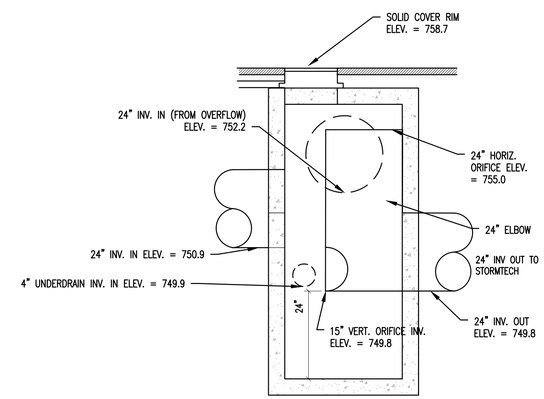

CULTEC OUTLET CONTROL STRUCTURE(D3)
NOT TO SCALE (3)

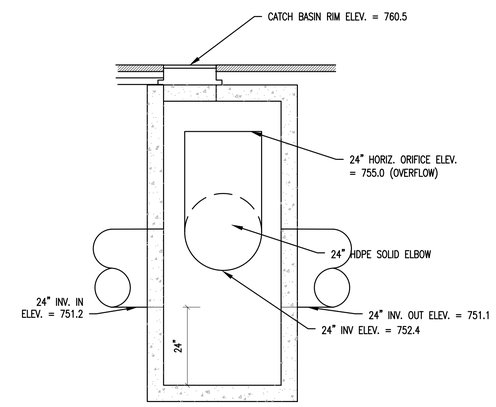

CULTEC SEPARATOR ROW INLET(D5)
NOT TO SCALE (4)

STATE OF NEW HAMPSHIRE
NICHOLAS A. FIORE
No. 13286
LICENSED
PROFESSIONAL ENGINEER
Stamp

No.	Description	Date

ENGINEERING VENTURES PC
208 Flynn Avenue, Suite 2A, Burlington, VT 05401 • 802-863-6225
85 Mechanic Street, Suite E2-3, Lebanon, NH 03766 • 603-442-9333
414 Union Street, Schenectady, NY 12305 • 518-630-9614
www.engineeringventures.com

SAXON PARTNERS
25 RECREATION PARK DRIVE, SUITE 204
HINGHAM, MA 02043
781-875-3300
802-343-5330

Sheet Title: STORMWATER DETAILS (3 OF 3)

Project Title: MAREK 2
402 MT SUPPORT ROAD
CITY OF LEBANON, GRAFTON COUNTY, NEW HAMPSHIRE

EV Project #	22715
Drawn By:	JWF
Checked By:	NAF
Scale:	NO SCALE
Date:	09/11/2023

C4.4a

PLOTTED: 9/9/2023 8:20 AM

S:\PROJECTS\3-20222715\NH 402 MT SUPPORT - SAXON\DWG\SHEET FILES\22715-C4.X CONSTRUCTION DETAILS.DWG

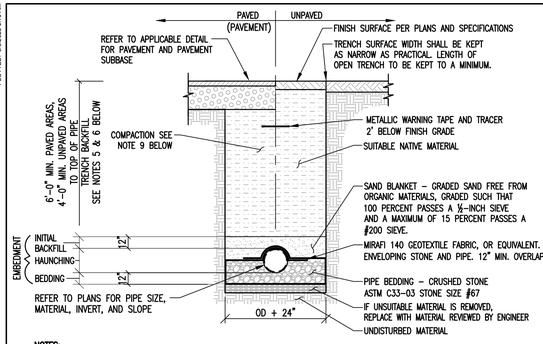

NOTES:

1. UNLESS OTHERWISE NOTED, ASSUME CLASS "C" SOILS. PERFORM ALL EXCAVATIONS TO OSHA REQUIREMENTS.
2. BEDDING TO PROVIDE A FIRM, STABLE, CONTINUOUS AND UNIFORM SUPPORT FOR THE FULL LENGTH OF PIPE.
3. FOR SEWER LINES THE MINIMUM DEPTH TO THE TOP OF THE PIPE SHALL BE 6'-0" IN PAVED AREAS AND 4'-0" IN UNPAVED AREAS. SHALLOWER DEPTHS REQUIRE APPROVAL FROM THE ENGINEER. REFER TO INSULATION OVER SHALLOW SEWER LINE DETAIL.
4. LEDGE, ROCK, BOULDERS AND LARGE STONES SHALL BE REMOVED TO PROVIDE A MINIMUM CLEARANCE OF TWELVE (12) INCHES BELOW AND ON EACH SIDE OF ALL PIPES.
5. TRENCH BACKFILL MATERIAL, INCLUDING ROADWAY LOCATIONS, SHALL BE NATURAL MATERIALS EXCAVATED FROM THE TRENCH DURING CONSTRUCTION AND FREE OF UNSUITABLE MATERIALS AS DEFINED IN THE EARTHWORK SPECIFICATIONS INCLUDED ON THESE PLANS.
6. WHEN APPLICABLE INSTALL PIPE WITH BELL ENDS DOWN SLOPE. PREVENT SEDIMENT FROM ENTERING NEW SEWER SYSTEM DURING CONSTRUCTION.
7. ALLOWABLE TRENCH WIDTH AT A PLANE 12 INCHES ABOVE THE PIPE SHALL BE NO MORE THAN 36 INCHES FOR SEWER PIPE LESS THAN 15 INCHES IN DIAMETER.
8. NO MECHANICAL TAMPERS SHALL BE USED DIRECTLY OVER PIPE TO INSURE PIPE IS NOT DAMAGED.
9. BACKFILL MATERIALS SHALL BE COMPACTED, IN 12" LAYERS, TO 92% OF MODIFIED PROCTOR (ASTM 1557) TO WITHIN 3 FEET OF FINISHED GRADE. IN AREAS UNDER ROADWAYS, DRIVES, AND PARKING THE UPPER 3 FEET SHALL BE COMPACTED, IN 6" LAYERS, TO 95% MODIFIED PROCTOR (ASTM 1557) AND IN LAWN OR OTHER UNDEVELOPED SPACE THE UPPER 3 FEET SHALL BE COMPACTED TO 92% MODIFIED PROCTOR.
10. PER ENV WQ 704.08, FORCE MAINS SHALL BE TREATED AS GRAVITY SEWERS FOR PURPOSES OF FOUNDATION BEDDING AND BACKFILLING REQUIREMENTS.

GRAVITY SEWER TRENCH DETAIL (1)

NOT TO SCALE

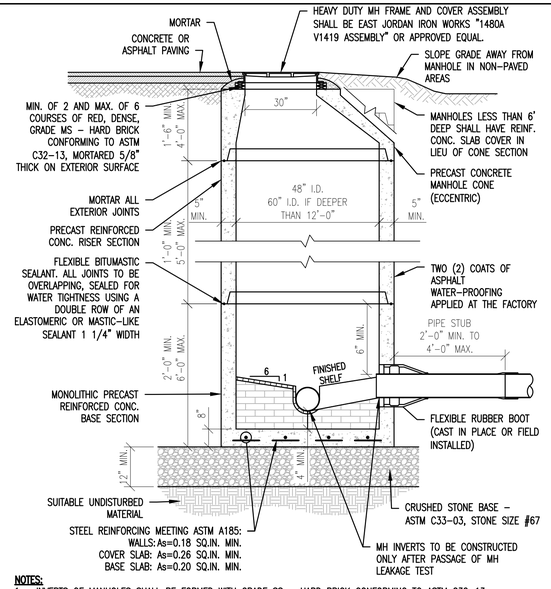

NOTES:

1. INVERTS OF MANHOLES SHALL BE FORMED WITH GRADE SS – HARD BRICK CONFORMING TO ASTM C32-13.
2. PROVIDE SMOOTH SWEEPING TRANSITIONS BETWEEN INVERTS OF INTERSECTING PIPE.
3. IF DEPTH OF MANHOLE IS 6 FT. OR LESS FROM RIM TO CENTERLINE INVERT, THEN A FLAT TOP MAY BE INSTALLED. IF DEPTH OF MANHOLE FROM RIM TO CENTERLINE INVERT IS MORE THAN 6 FT., THEN AN ECCENTRIC CONICAL TOP SHALL BE INSTALLED.
4. MANHOLES SHALL HAVE A BRICK PAVED SHELF AND INVERT CONSTRUCTED TO CONFORM TO THE SIZE OF PIPE AND FLOW. AT CHANGES IN DIRECTION, THE INVERTS SHALL BE LAID OUT IN CURVES OF THE LONGEST RADIUS POSSIBLE TANGENT TO THE CENTER LINE OF THE SEWER PIPES. SHELVES SHALL BE CONSTRUCTED TO THE ELEVATION OF THE HIGHEST PIPE CROWN AND SLOPED TO DRAIN TOWARD THE FLOWING THROUGH CHANNEL. UNDERLAYMENT OF THE INVERT AND SHELF SHALL CONSIST OF BRICK MASONRY. INVERTS AND SHELVES SHALL BE PLACED AFTER TESTING.
5. MANHOLE AND COVER SHALL BE DESIGNED FOR H20 LOADING.
6. MANHOLE SHALL CONFORM TO ASTM C478 SPECIFICATIONS FOR "PRECAST REINFORCED CONCRETE MANHOLE SECTIONS".
7. CONCRETE FC=4,000 PSI @ 28 DAYS MINIMUM
8. BASE SECTION SHALL BE A ONE POUR MONOLITHIC SECTION

SEWER MANHOLE DETAIL (4)

NOT TO SCALE

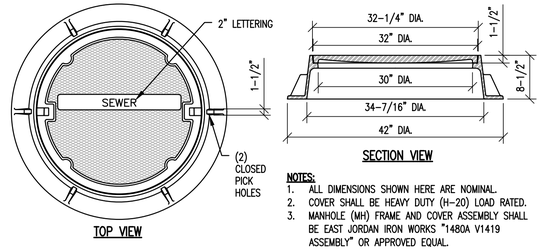

NOTES:

1. ALL DIMENSIONS SHOWN HERE ARE NOMINAL.
2. COVER SHALL BE HEAVY DUTY (H-20) LOAD RATED.
3. MANHOLE (MH) FRAME AND COVER ASSEMBLY SHALL BE EAST JORDAN IRON WORKS "1480A V1419 ASSEMBLY" OR APPROVED EQUAL.

SEWER MANHOLE FRAME & COVER (6)

NOT TO SCALE

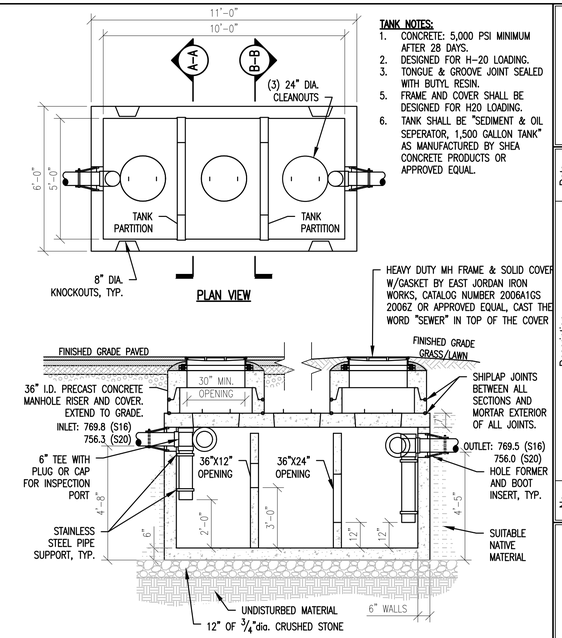

TANK NOTES:

1. CONCRETE: 5,000 PSI MINIMUM AFTER 28 DAYS.
2. DESIGNED FOR H-20 LOADING.
3. TONGUE & GROOVE JOINT SEALED WITH BUTYL RESIN.
5. FRAME AND COVER SHALL BE DESIGNED FOR H20 LOADING.
6. TANK SHALL BE "SEDIMENT & OIL SEPERATOR, 1,500 GALLON TANK" AS MANUFACTURED BY SHEA CONCRETE PRODUCTS OR APPROVED EQUAL.

HEAVY DUTY MH FRAME & SOLID COVER W/GASKET BY EAST JORDAN IRON WORKS, CATALOG NUMBER 2006A1GS 2006Z OR APPROVED EQUAL, CAST THE WORD "SEWER" IN TOP OF THE COVER

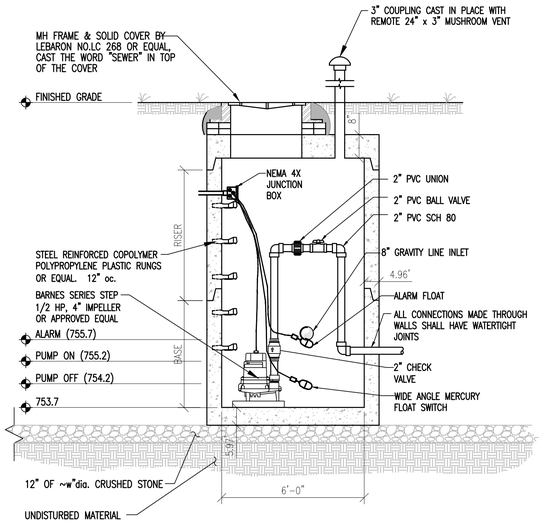

ELEVATION VIEW PUMP STATION

PUMP STATION NOTES:

1. WATER PROOF, SEAMLESS PUMP STATION SUPPLIED BY CAMP PRECAST, OR EQUIVALENT.
2. CONTROL PANEL TO BE LOCATED IN THE PROPOSED BUILDING. AND SHALL CONTAIN:
   A. RUN LIGHTS
   B. MANUAL ON/OFF AUTOMATIC CONTROL
   C. ALARM SILENCE BUTTON
   D. AUDIO AND VISUAL ALARM TO BE MOUNTED ON THE CONTROL PANEL BOX.
   E. PUMP TIMER AND COUNTER
3. SPARE PARTS TO BE SUPPLIED TO INCLUDE:
   A. EXTRA FLOAT SWITCH
   B. TWO EXTRA RESET BLOCKS IN CONTROL PANEL.
   C. TWO ORIGINAL SETS OF MANUALS FOR BOTH THE PUMPS AND CONTROL PANELS.
4. ALL ELECTRICAL COMPONENTS TO BE UNDERWRITERS LABORATORY APPROVED, INSTALLED BY A LICENSED ELECTRICIAN IN ACCORDANCE WITH THE NATIONAL ELECTRICAL CODE.
5. PUMP TO BE BARNES SERIES STEP, 1/2 HP, SINGLE PHASE SUBMERSIBLE PUMP WITH 4.00" IMPELLER.
6. ALL PIPE AND FITTINGS IN PUMP STATION SHALL BE FLANGED SCHEDULE 80 PVC.
7. TANK SHALL BE INSTALLED LEVEL ON A COMPACTED 12" GRAVEL BASE.
8. STEPS TO BE COPOLYMER POLYPROPYLENE PLASTIC WITH ~6" GRADE 60 REBAR CONTINUOUS THROUGHOUT.

SIMPLEX PUMP STATION (ROUND) (7)

NOT TO SCALE

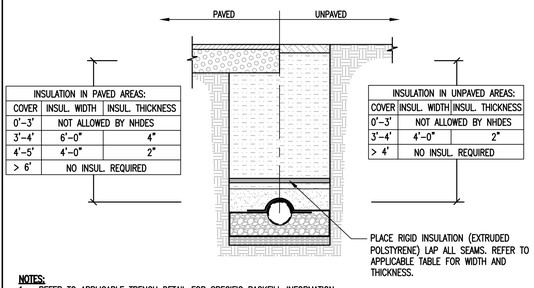

NOTES:

1. REFER TO APPLICABLE TRENCH DETAIL FOR SPECIFIC BACKFILL INFORMATION.
2. NOTIFY DEPARTMENT OF PUBLIC WORKS TO REVIEW INSTALLATION AND BACKFILL.
3. ALL SHALLOW SEWER INSTALLATIONS MUST BE APPROVED BY ENGINEER.
4. THE MINIMUM DEPTH TO THE TOP OF THE PIPE SHALL BE 6'-0" IN PAVED AREAS AND 4'-0" IN UNPAVED AREAS. SHALLOWER DEPTHS REQUIRE APPROVAL FROM THE ENGINEER. REFER TO INSULATION OVER SHALLOW SEWER LINE DETAIL.

SHALLOW SEWER LINE INSULATION DETAIL (2)

NOT TO SCALE

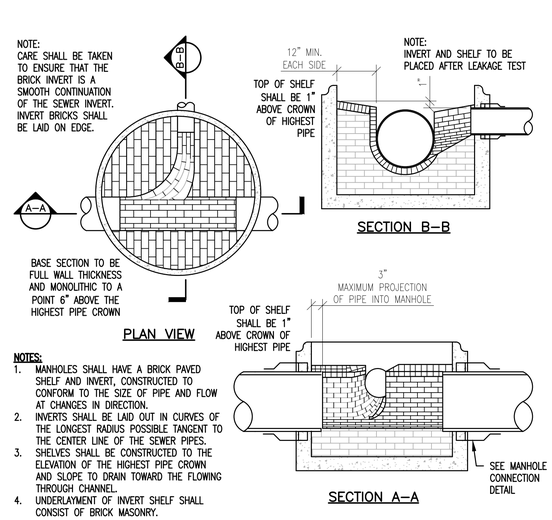

NOTES:

1. MANHOLES SHALL HAVE A BRICK PAVED SHELF AND INVERT, CONSTRUCTED TO CONFORM TO THE SIZE OF PIPE AND FLOW AT CHANGES IN DIRECTION.
2. INVERTS SHALL BE LAID OUT IN CURVES OF THE LONGEST RADIUS POSSIBLE TANGENT TO THE CENTER LINE OF THE SEWER PIPES.
3. SHELVES SHALL BE CONSTRUCTED TO THE ELEVATION OF THE HIGHEST PIPE CROWN AND SLOPE TO DRAIN TOWARD THE FLOWING THROUGH CHANNEL.
4. UNDERLAYMENT OF INVERT SHELF SHALL CONSIST OF BRICK MASONRY.

SEWER MANHOLE INVERT AND SHELF DETAIL (5)

NOT TO SCALE

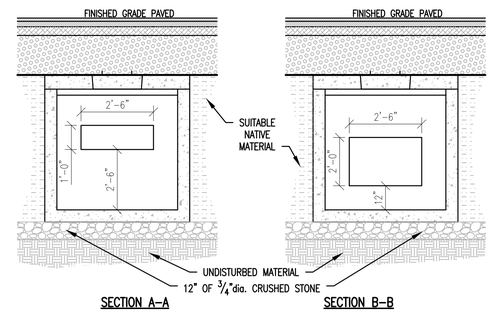

GENERAL NOTES:

1. ITEMS OF WORK SHALL INCLUDE ALL NECESSARY MATERIALS AND THEIR INSTALLATION AS REQUIRED TO OPERATE THE GRIT/OIL SEPARATOR.
2. THE PRECAST STRUCTURE SHALL BE "SEDIMENT & OIL SEPERATOR, 1,500 GALLON TANK" AS MANUFACTURED BY SHEA CONCRETE PRODUCTS OR APPROVED EQUAL. THE PRE-CAST CONCRETE STRUCTURE AND RISERS SHALL BE CAPABLE OF WITHSTANDING H-20 LOADING AS CONFIGURED. THE EXTERIOR OF THE PRE-CAST CONCRETE STRUCTURE SHALL RECEIVE TWO COATS OF ASPHALT SEAL COATING AT THE FACTORY.
3. JOINTS BETWEEN THE CONCRETE SECTIONS SHALL BE SEALED BY BUTYL MASTIC (AASHTO M-198).
4. PIPE PENETRATIONS SHALL BE SEALED BY FLEXIBLE WATERTIGHT BOOTS WITH STAINLESS STEEL BANDS.
5. THE OIL-GRIT SEPARATOR AND RISERS SHALL BE FILLED WITH WATER AND SUBJECTED TO A 24 HOUR HYDROSTATIC LEAKAGE TEST. NO LEAKAGE WILL BE ALLOWED DURING THE TEST PERIOD.
6. AN ALTERNATE VACUUM LEAKAGE TEST PRIOR TO BACKFILLING IS ALSO ACCEPTABLE. THE VACUUM TEST WILL REQUIRE THE INSTALLED VAULT AND RISERS TO HOLD A VACUUM PRESSURE OF NEGATIVE 5 INCHES MERCURY FOR 10 MINUTES WITH NO LOSS/GAIN.
7. IT IS THE RESPONSIBILITY OF THE CONTRACTOR TO PROVIDE A WATERTIGHT STRUCTURE.
8. VENT OIL-GRIT SEPARATOR IN CONFORMANCE WITH VERMONT AND INTERNATIONAL PLUMBING CODES.
9. SHOP DRAWINGS OF THE OIL-GRIT SEPARATOR AND COMPONENTS SHALL BE PROVIDED TO THE ENGINEER FOR REVIEW AND APPROVAL PRIOR TO FABRICATION.
9. BACKFILL MATERIALS SHALL BE COMPACTED, IN 12" LAYERS, TO 92% OF MODIFIED PROCTOR (ASTM 1557) TO WITHIN 3 FEET OF FINISHED GRADE. IN AREAS UNDER ROADWAYS, DRIVES, AND PARKING THE UPPER 3 FEET SHALL BE COMPACTED, IN 6" LAYERS, TO 95% MODIFIED PROCTOR (ASTM 1557) AND IN LAWN OR OTHER UNDEVELOPED SPACE THE UPPER 3 FEET SHALL BE COMPACTED TO 92% MODIFIED PROCTOR.

1,500 GALLON OIL-GRIT SEPARATOR (9)

NOT TO SCALE

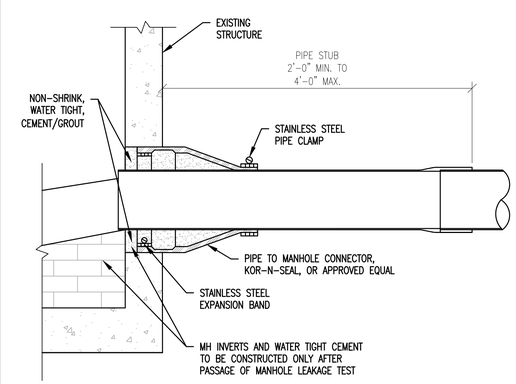

NOTES:

1. CORE HOLE SHALL BE SMOOTH, SYMMETRICAL, AND APPROPRIATELY SIZED FOR SEWER PIPE INSTALLATION.
2. WHEN APPLICABLE CONTRACTOR SHALL RECONSTRUCT EXISTING SHELF IN MANHOLES TO PROVIDE POSITIVE FLOW TO INVERT OUT.

MANHOLE CONNECTION (3)

NOT TO SCALE

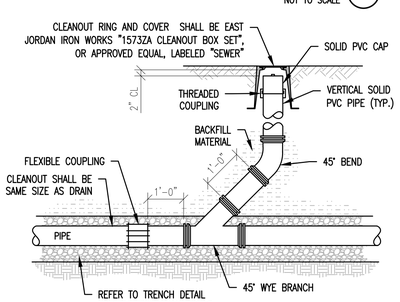

SEWER CLEANOUT DETAIL (8)

NOT TO SCALE

No.	Description	Date

STATE OF NEW HAMPSHIRE
NICHOLAS A. FIORE
No. 13286
LICENSED
PROFESSIONAL ENGINEER
Stamp

ENGINEERING VENTURES PC
208 Flynn Avenue, Suite 2A, Burlington, VT 05401 • 802-863-6225
85 Mechanic Street, Suite E2-3, Lebanon, NH 03766 • 603-442-9333
414 Union Street, Schenectady, NY 12305 • 518-630-9614
www.engineeringventures.com

SAXON PARTNERS
25 RECREATION PARK DRIVE, SUITE 204
HINGHAM, MA 02043
781-875-3300
802-343-6330

Sheet Title: SANITARY SEWER DETAILS

Project Title: MAREK 2
402 MT SUPPORT ROAD
CITY OF LEBANON, GRAFTON COUNTY, NEW HAMPSHIRE

EV Project #	22715
Drawn By:	JWF
Checked By:	NAF
Scale:	NO SCALE
Date:	09/11/2023

C4.5

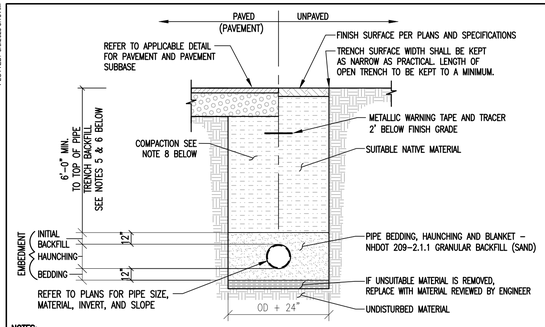

NOTES:

1. UNLESS OTHERWISE NOTED, ASSUME CLASS "C" SOILS. PERFORM ALL EXCAVATIONS TO OSHA REQUIREMENTS.
2. BEDDING TO PROVIDE A FIRM, STABLE, CONTINUOUS AND UNIFORM SUPPORT FOR FULL LENGTH OF PIPE.
3. PROVIDE 6'-0" MINIMUM COVER OVER WATER PIPE. OTHERWISE, REFER TO INSULATION OVER SHALLOW WATER LINE DETAIL.
4. INSTALL WATER PIPE IN ACCORDANCE WITH AWWA STANDARD C600.
5. LEDGE, ROCK, BOULDERS AND LARGE STONES SHALL BE REMOVED TO PROVIDE A MINIMUM CLEARANCE OF SIX INCHES BELOW AND ON EACH SIDE OF ALL PIPES.
6. TRENCH BACKFILL MATERIAL, INCLUDING ROADWAY LOCATIONS, SHALL BE NATURAL MATERIALS EXCAVATED FROM THE TRENCH DURING CONSTRUCTION AND FREE OF UNSUITABLE MATERIALS AS DEFINED IN THE EARTHWORK SPECIFICATIONS INCLUDED ON THESE PLANS.
7. NO MECHANICAL TAMPERS SHALL BE USED DIRECTLY OVER PIPE TO INSURE PIPE IS NOT DAMAGED.
8. BACKFILL MATERIALS SHALL BE COMPACTED, IN 12" LAYERS, TO 92% OF MODIFIED PROCTOR (ASTM 1557) TO WITHIN 3 FEET OF FINISHED GRADE. IN AREAS UNDER ROADWAYS, DRIVES, AND PARKING THE UPPER 3 FEET SHALL BE COMPACTED, IN 6" LAYERS, TO 95% MODIFIED PROCTOR (ASTM 1557) AND IN LAWN OR OTHER UNDEVELOPED SPACE THE UPPER 3 FEET SHALL BE COMPACTED TO 92% MODIFIED PROCTOR.

WATER TRENCH (1)

NOT TO SCALE

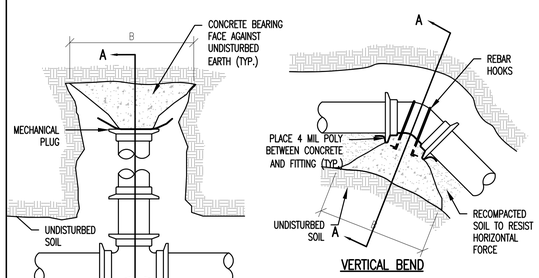

CAPPED STUB/END OF LINE

VERTICAL BEND

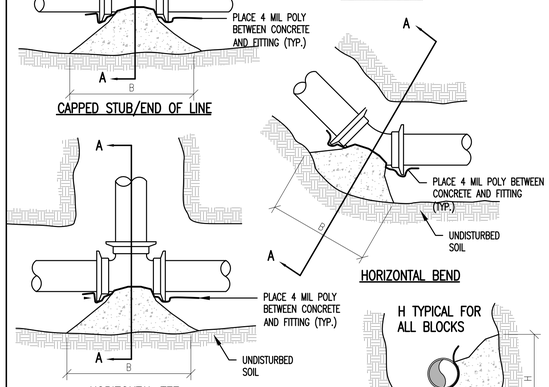

HORIZONTAL BEND

HORIZONTAL TEE

SECTION A–A

TABLE 2 – THRUST DEVELOPED PER 100psi PRESSURE (lbs force)					
PIPE DIAMETER IN.	VALVES AND DEAD ENDS, TEES	90° BENDS	45° BENDS	22 1/2° BENDS	11 1/4° BENDS
4	1810	2560	1390	635	320
6	3740	5290	2860	1370	690
8	6430	9100	4920	2320	1170
10	9680	13680	7410	3610	1820
12	13690	19350	10470	5080	2550
14	18380	25990	14100	6100	3080
16	23780	33630	18280	7960	4020

NOTES:

1. PERFORM HYDROSTATIC AND LEAKAGE TEST PRESSURE PER SPECIFICATIONS.
2. PLACE 4 MIL POLYETHYLENE BETWEEN FITTINGS AND THRUST BLOCKS.
3. CONCRETE SHALL BE CLASS B.
4. ON ALL THRUST BLOCKS, B SHALL BE THE GREATER DIMENSION, USE 1.5:1 TO 2:1 FOR B:H.

TABLE 1 – BEARING STRENGTH OF UNDISTURBED SOIL	
SOIL TYPE	BEARING STRENGTH
PEAT, ETC.	0 lb/ft²
SOFT CLAY	500 lb/ft²
SAND	1000 lb/ft²
SAND AND GRAVEL	1500 lb/ft²
SAND AND GRAVEL WITH CLAY	2000 lb/ft²
SAND AND GRAVEL CEMENTED WITH CLAY	4000 lb/ft²
HARD PAN	5000 lb/ft²

DETERMINING MINIMUM BEARING FACE AREA:

THE AREA (ft²) SHALL BE CALCULATED BY DETERMINING THE TOTAL THRUST GENERATED AT THE FITTING.

DIVIDE THE THRUST DEVELOPED (lbs force) (FROM TABLE 2) BY THE BEARING STRENGTH OF THE SOIL (FROM TABLE 1). THE RESULT IS THE AREA OF THE SOIL REQUIRED TO RESIST THE THRUST (A).

THE AREA CALCULATED WILL BE FOR THE AREA OF CONCRETE UP AGAINST THE TRENCH WALL (i.e. THE BACK SIDE OF THE BLOCK). USE THE TEST PRESSURE TO DETERMINE THE TOTAL THRUST.

$$\text{AREA} = \frac{\text{THRUST DEVELOPED (lbs force)}}{\text{BEARING STRENGTH OF SOIL}}$$

TYPICAL BEARING THRUST BLOCK (2)

NOT TO SCALE

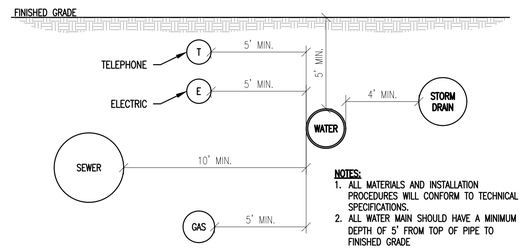

NOTES:

1. ALL MATERIALS AND INSTALLATION PROCEDURES WILL CONFORM TO TECHNICAL SPECIFICATIONS.
2. ALL WATER MAIN SHOULD HAVE A MINIMUM DEPTH OF 5' FROM TOP OF PIPE TO FINISHED GRADE

WATER MAIN UTILITY SEPARATIONS (3)

NOT TO SCALE

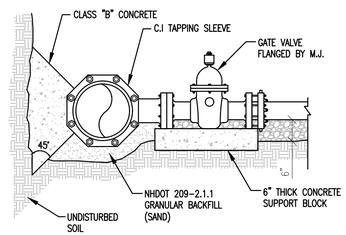

SECTION VIEW

NOTES:

1. AREA OF THRUST BLOCK BEARING AGAINST UNDISTURBED SOIL SHALL BE THE SAME AS FOR 1/4" BEND (90°) BEND.
2. UTILIZE MEGALUG MECHANICAL JOINT RESTRAINT ON M.J. END.
3. SEE TYPICAL GATE VALVE DETAIL FOR VALVE BOX INFORMATION.
4. SEE TYPICAL WATER TRENCH DETAIL FOR PIPE BEDDING REQUIREMENTS.

TAPPING SLEEVE AND VALVE (4)

NOT TO SCALE

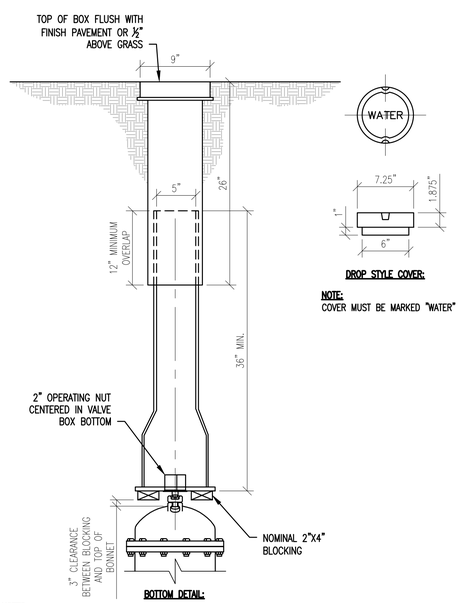

NOTE:
COVER MUST BE MARKED "WATER"

NOTES:

1. ALL MATERIALS AND INSTALLATION PROCEDURES WILL CONFORM TO TECHNICAL SPECIFICATIONS.
2. ALL PIPE SHOULD HAVE A MINIMUM DEPTH OF 5' FROM TOP OF PIPE TO FINISHED GRADE

TYPICAL VALVE BOX (5)

NOT TO SCALE

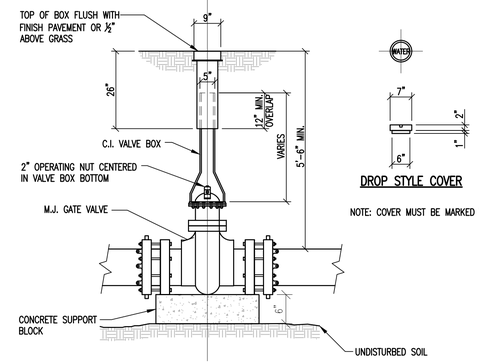

NOTE: COVER MUST BE MARKED "WATER"

NOTES:

1. ALL MATERIALS AND INSTALLATION PROCEDURES WILL CONFORM TO TECHNICAL SPECIFICATIONS.
2. UTILIZE MEGALUG MECHANICAL JOINT RESTRAINT ON ALL M.J. GATE VALVES.
3. SEE TYPICAL WATER TRENCH DETAIL FOR PIPE BEDDING REQUIREMENTS.
4. IF DEPTH FROM GRADE TO TOP OF VALVE OPERATING NUT IS GREATER THAN 6'-0 , A VALVE STEM RISER MADE OF HIGH STRENGTH STEEL SHALL BE PROVIDED. DEPTH FROM VALVE STEM RISER NUT TO GRADE WILL BE 4 TO 6 FEET.

GATE VALVE (6)

NOT TO SCALE

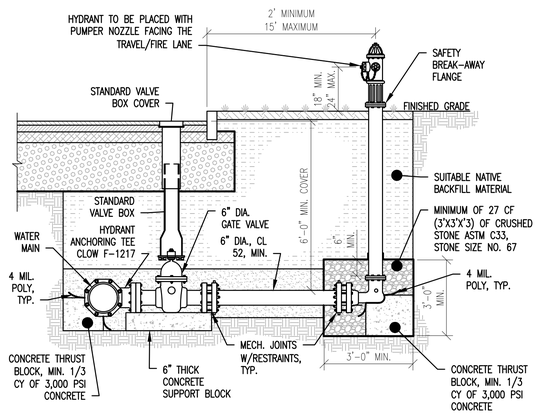

NOTES:

1. HYDRANT DRAIN SHALL BE PLUGGED.
2. ACCEPTABLE HYDRANT MAKE AND MODEL: MUELLER SUPER CENTURION 250 MODEL A-423 (NO HYDRANT DRAIN).
3. HYDRANT SHALL MEET OR EXCEED AWWA C502.
4. 5¼" VALVE OPENING.
5. ONE (1) 4½" NST PUMPER NOZZLE.
6. TWO (2) 2½" NST HOSE NOZZLE.
7. OPERATING NUT AND NOZZLE CAPS – NS#7 PENTAGON
8. SIX (6) INCH MECHANICAL JOINT CONNECTION WITH ACCESSORIES FOR 6.90 O.D. DI PIPE.
9. OPERATION: OPEN COUNTERCLOCKWISE (LEFT).
10. DEPTH AS REQUIRED.
11. CONTRACTOR TO SUPPLY AND INSTALL HYDRANT
12. TOP OF BLOCKING TO BE 2 INCHES FROM HYDRANT WEEP HOLES.

FIRE HYDRANT (7)

NOT TO SCALE

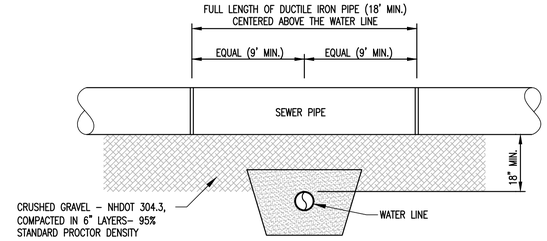

WATER LINE BELOW SEWER

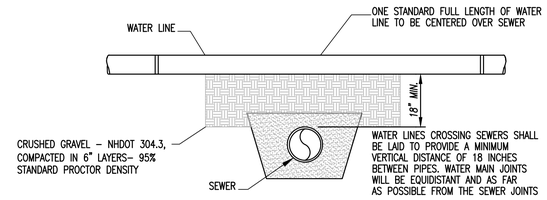

WATER LINE ABOVE SEWER

(PREFERED CROSSING ORIENTATION)

NOTE:

PROTECTION OF WATER SUPPLIES

a. THERE SHALL BE NO PHYSICAL CONNECTION BETWEEN A PUBLIC OR PRIVATE POTABLE WATER SUPPLY SYSTEM AND A SEWER OR SEWER APPURTENANCE WHICH WOULD PERMIT THE PASSAGE OF SEWAGE OR POLLUTED WATER INTO THE POTABLE SUPPLY. NO WATER PIPE SHALL PASS THROUGH OR COME IN ANY CONTACT WITH ANY PART OF A SEWER OR SEWER MANHOLE.

b. NO SEWER SHALL BE LOCATED WITHIN THE WELL PROTECTIVE RADII ESTABLISHED IN ENV-WS 300 FOR ANY PUBLIC WATER SUPPLY WELL OR WITHIN 100 FEET OF ANY PRIVATE WATER SUPPLY WELL.

c. SEWERS SHALL BE LOCATED AT LEAST TEN FEET HORIZONTALLY FROM ANY EXISTING OR PROPOSED WATER MAIN.

d. A DEVIATION FROM THE SEPARATION REQUIREMENTS OF (b) or (c) ABOVE SHALL BE ALLOWED WHERE NECESSARY TO AVOID CONFLICT WITH SUBSURFACE STRUCTURES, UTILITY CHAMBERS, AND BUILDING FOUNDATIONS PROVIDED THAT THE SEWER IS CONSTRUCTED IN ACCORDANCE WITH THE FORCE MAIN CONSTRUCTION REQUIREMENTS SPECIFIED IN ENV-Wq 704.06.

e. WHENEVER SEWERS MUST CROSS WATER MAINS, THE SEWER SHALL BE CONSTRUCTED AS FOLLOWS:

1.) VERTICAL SEPARATION OF THE SEWER AND WATER MAIN SHALL BE NOT LESS THAN 18 INCHES, WITH WATER ABOVE SEWER; AND

2.) SEWER PIPE JOINTS SHALL BE LOCATED AT LEAST 9 FEET HORIZONTALLY FROM THE WATER MAIN.

f. WATER-SEWER SEPARATION SHALL COMPLY WITH ENV-Wq 704.19 OR A WAIVER MUST BE REQUESTED FROM THE NH DEPARTMENT OF ENVIRONMENTAL SERVICES.

TYPICAL SEWER/WATER SEPARATION DETAILS (8)

NOT TO SCALE

STATE OF NEW HAMPSHIRE
NICHOLAS A. FIORE
No. 13286
LICENSED
PROFESSIONAL ENGINEER
Stamp

No.	Description	Date

ENGINEERING VENTURES PC
208 Flynn Avenue, Suite 2A, Burlington, VT 05401 • 802-863-6225
85 Mechanic Street, Suite E2-3, Lebanon, NH 03766 • 603-442-9333
414 Union Street, Schenectady, NY 12305 • 518-630-9614
www.engineeringventures.com

SAXON PARTNERS
25 RECREATION PARK DRIVE, SUITE 204
HINGHAM, MA 02043
781-875-3300
802-343-6330

Sheet Title: WATER DETAILS

Project Title: MAREK 2
402 MT SUPPORT ROAD
CITY OF LEBANON, GRAFTON COUNTY, NEW HAMPSHIRE

EV Project #	22715
Drawn By:	JWF
Checked By:	NAF
Scale:	NO SCALE
Date:	09/11/2023

C4.6

PLOTTED: 9/9/2023 8:18 AM

S:\PROJECTS\0-9\2022715 NH 402 MT SUPPORT, SAXON\DWG\SHEET FILES\22715 C4.X CONSTRUCTION DETAILS.DWG

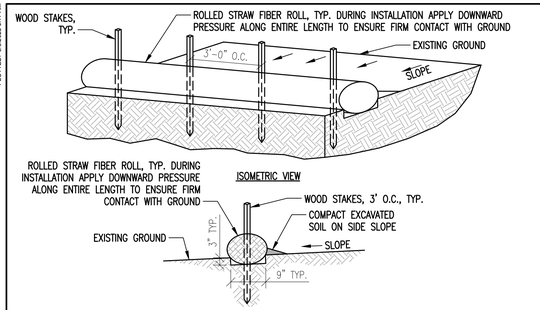

STRAW FIBER ROLL NOTES

1. INSTALL ROLLED STRAW FIBER ROLL PARALLEL ALONG THE CONTOUR OF THE SLOPE.
2. WHERE PROJECT ACTIVITIES ARE WITHIN 50 FEET OF A WETLAND, A DOUBLE ROW OF FIBER ROLLS SHALL BE USED.
3. TO MAXIMIZE SEDIMENT CONTAINMENT WITH THE STRAW FIBER ROLL, PLACE THE INITIAL STRUCTURE AT THE TOP/CREST OF THE SLOPE IF SIGNIFICANT RUNOFF IS EXPECTED FROM ABOVE. IF NO RUNOFF FROM ABOVE IS EXPECTED, THE INITIAL STRAW WATTLE CAN BE INSTALLED AT THE APPROPRIATE DISTANCE DOWNHILL FROM THE TOP/CREST OF THE SLOPE. THE FINAL STRUCTURE SHOULD BE INSTALLED AT OR JUST BEYOND THE BOTTOM/TOE OF THE SLOPE. WATTLES SHOULD BE INSTALLED PERPENDICULAR TO THE PRIMARY DIRECTION OF OVERLAND FLOW

STRAW FIBER ROLL – SOIL

NOT TO SCALE 3

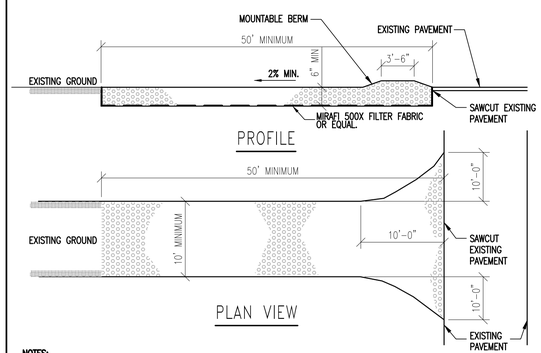

NOTES:

1. STONE SIZE: USE 3" (MIN) CRUSHED STONE.
2. SURFACE WATER – ALL SURFACE WATER FLOWING OR DIVERTED TOWARD CONSTRUCTION ENTRANCE SHALL BE PIPED ACROSS THE ENTRANCE.
3. MAINTENANCE – THE ENTRANCE SHALL BE MAINTAINED IN A CONDITION WHICH WILL PREVENT TRACKING OR FLOWING OF SEDIMENT ONTO PUBLIC RIGHT–OF–WAYS. THIS MAY REQUIRE PERIODIC TOP DRESSING WITH ADDITIONAL STONE AS CONDITIONS DEMAND. REPAIR AND/OR CLEANOUT ANY MEASURES USED TO TRAP SEDIMENT. TRACKING ONTO PUBLIC RIGHT–OF–WAYS SHALL **NOT** BE ALLOWED. ALL SEDIMENT SPILLED, DROPPED, OR WASHED ONTO PUBLIC RIGHT–OF–WAYS MUST BE REMOVED IMMEDIATELY AND ANY WASH WATER MUST BE CONTAINED AND PROPERLY DISPOSED OF.
4. PERIODIC INSPECTION AND NEEDED MAINTENANCE SHALL BE PROVIDED AFTER EACH RAIN.
5. WHEELS SHALL BE CLEANED TO REMOVE MUD PRIOR TO ENTRANCE ONTO PUBLIC RIGHT–OF–WAY. WHEN WASHING IS REQUIRED, IT SHALL BE DONE ON AN AREA STABILIZED WITH STONE WHICH DRAINS INTO AN APPROVED SEDIMENT TRAPPING DEVICE.

STABILIZED CONSTRUCTION ENTRANCE

NOT TO SCALE 2

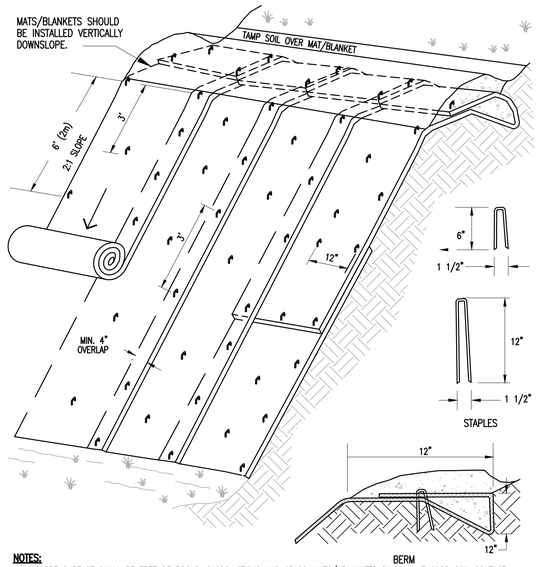

NOTES:

1. SLOPE SURFACE SHALL BE FREE OF ROCKS, CLODS, STICKS AND GRASS. MATS/ BLANKETS SHALL HAVE GOOD SOIL CONTACT.
2. APPLY PERMANENT SEEDING BEFORE PLACING BLANKETS.
3. LAY BLANKETS LOOSELY AND STAKE OR STAPLE TO MAINTAIN DIRECT CONTACT WITH THE SOIL. DO NOT STRETCH.
4. THERE SHALL BE NO PLASTIC, OR MULTI–FILAMENT OR MONOFILAMENT POLYPROPYLENE NETTING OR MESH WITH AN OPENING SIZE OF GREATER THAN 1/8 INCHES MATERIAL UTILIZED. (NOT APPLICABLE TO TURF REINFORCEMENT MATS).
5. TURF REINFORCEMENT MATS SHALL BE COVERED WITH SOIL TO PREVENT EXPOSURE OF THE MATS TO THE SURFACE.
6. EROSION FABRIC SHALL BE EC–4Y 100% BIODEGRADABLE COIR MAT AVAILABLE THROUGH EAST COAST EROSION CONTROL OR EQUAL.

EROSION CONTROL BLANKET

NOT TO SCALE 4

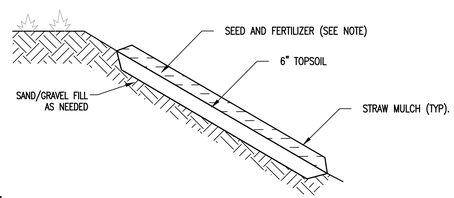

NOTES:

1. SEEDING AND MULCHING OF DISTURBED AREAS SHALL TAKE PLACE WITHIN 48 HOURS OF FINAL GRADING.
2. MULCH: HAY SHALL NOT BE USED. STRAW MULCH SHALL BE UTILIZED AND SHALL BE APPLIED AT A RATE OF 90–1,000 LBS/1,000 SF. MULCH SHALL NOT BE PLACED ON SLOPES OF GREATER THAN 3:1. SEED IMPREGNATED EROSION CONTROL NETTING SHALL BE USED IN ITS PLACE.
3. SEED: SEEDING SHALL OCCUR AFTER APRIL 15 AND PRIOR TO SEPTEMBER 15TH IN ORDER TO ESTABLISH A STAND OF GRASS PRIOR TO GROUND FREEZING. SEED SHALL BE IN ACCORDANCE WITH SEED SPECIFICATION ON THIS SHEET.
4. COVER SEED WITH ¼ INCH SOIL UNLESS A HYDROSEEDER IS USED.
5. MULCH ANCHORING: SHALL BE ACCOMPLISHED BY DEGRADABLE MULCH NETTING. USE WHEN SLOPES ARE GREATER THAN 10%.
6. TOPSOIL AND MULCHING NOT TO BE APPLIED IN AREAS OF TRAVEL WAYS.

SEEDED AND MULCHED AREAS DETAIL

NOT TO SCALE 5

SEEDING SPECIFICATION:

URBAN MIX GRASS SEED– FOR USE IN GRASSED LAWN AREAS AROUND BUILDING AND PARKING – TEMPORARY AND PERMANENT APPLICATIONS		
% BY WEIGHT	LBS. LIVE SEED BY ACRE	TYPE OF SEED
66.0	40.0	CREEPING RED FESCUE
33.0	20.0	KENTUCKY BLUEGRASS
100	60.0 # LIVE SEED/ACRE	

CONSERVATION MIX GRASS SEED– FOR USE IN ALL OTHER AREAS		
% BY WEIGHT	LBS. LIVE SEED PER ACRE	TYPE OF SEED
50	15.0	SMOOTH BROMEGRASS
17	5.0	RYEGRASS
33	10.0	BIRDSFOOT TREFOIL
100	30.0 # LIVE SEED/ACRE	

FERTILIZER– 10 LBS. PER 1000S.F.
SPRING SEEDING
FALL SEEDING

LIME– 90 LBS. PER 1000S.F.
DOLOMITIC GROUND LIMESTONE
NOT LESS THAN 85% OF THE TOTAL CARBONATE

TOP SOIL
4" MINIMUM APPROVED TOPSOIL

STRAW MULCH– 2 BALES PER 1000S.F.
APPLY BINDER OR NETTING AS NEEDED

SEED SEPCIFICATION

NOT TO SCALE 8

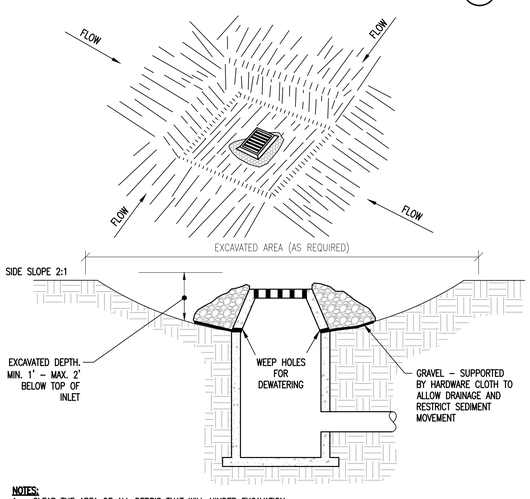

NOTES:

1. CLEAR THE AREA OF ALL DEBRIS THAT WILL HINDER EXCAVATION.
2. GRADE APPROACH TO THE INLET UNIFORMLY AROUND THE BASIN.
3. WEEP HOLES SHALL BE PROTECTED BY GRAVEL.
4. UPON STABILIZATION OF CONTRIBUTING DRAINAGE AREA, SEAL WEEP HOLES, FILL BASIN WITH STABLE SOIL TO FINAL GRADE, COMPACT IT PROPERLY AND STABILIZE WITH PERMANENT SEEDING.

INLET PROTECTION

NOT TO SCALE 3

EROSION CONTROL NOTES

WINTER EROSION CONTROL NOTES

1. TO ADEQUATELY PROTECT WATER QUALITY DURING COLD WEATHER AND DURING SPRING RUNOFF, THE ADDITIONAL STABILIZATION TECHNIQUES SPECIFIED IN THIS SECTION SHALL BE EMPLOYED DURING THE PERIOD FROM OCTOBER 15 THROUGH MAY 1.
2. THE AREA OF EXPOSED, UNSTABILIZED SOIL SHALL BE LIMITED TO ONE ACRE AND SHALL BE PROTECTED AGAINST EROSION BY THE METHODS DESCRIBED IN THIS SECTION PRIOR TO ANY THAW OR SPRING MELT EVENT. THE ALLOWABLE AREA OF EXPOSED SOIL MAY BE INCREASED IF A WINTER CONSTRUCTION PLAN, DEVELOPED BY A QUALIFIED ENGINEER OR A CPESC SPECIALIST, IS REVIEWED AND APPROVED BY NHDES.
3. ALL PROPOSED VEGETATED AREAS WHICH DO NOT EXHIBIT A MINIMUM OF 85% VEGETATIVE GROWTH BY OCTOBER 15TH, OR WHICH ARE DISTURBED AFTER OCTOBER 15TH, SHALL BE STABILIZED BY SEEDING AND INSTALLING EROSION CONTROL BLANKETS ON SLOPES GREATER THAN 3:1, AND SEEDING AND PLACING 3 TO 4 TONS OF MULCH PER ACRE, SECURED WITH ANCHORED NETTING, ELSEWHERE. THE INSTALLATION OF EROSION CONTROL BLANKETS OR MULCH AND NETTING SHALL NOT OCCUR OVER ACCUMULATED SNOW OR ON FROZEN GROUND AND SHALL BE COMPLETED IN ADVANCE OF THAW OR SPRING MELT EVENTS.
4. ALL DITCHES OR SWALES WHICH DO NOT EXHIBIT A MINIMUM OF 85% VEGETATIVE GROWTH BY OCTOBER 15TH, OR WHICH ARE DISTURBED AFTER OCTOBER 15TH, SHALL BE STABILIZED TEMPORARILY WITH STONE OR EROSION CONTROL BLANKETS APPROPRIATE FOR THE DESIGN FLOW CONDITIONS.
5. AFTER OCTOBER 15TH, INCOMPLETE ROAD OR PARKING SURFACES, WHERE WORK HAS STOPPED FOR THE WINTER SEASON, SHALL BE PROTECTED WITH A MINIMUM OF 3 INCHES OF CRUSHED GRAVEL PER NHDOT ITEM 304.3.
6. ALL PROPOSED STABILIZATION IN ACCORDANCE WITH THE ABOVE SHALL BE COMPLETED WITHIN A DAY OF ESTABLISHING THE GRADE THAT IS FINAL OR THAT OTHERWISE WILL EXIST FOR MORE THAN 5 DAYS.

GENERAL EROSION CONTROL NOTES

1. THE "ON–SITE EROSION CONTROL PLAN COORDINATOR" SHALL BE THE GENERAL CONTRACTOR, THIS INDIVIDUAL SHALL BE PRESENT ON–SITE FROM DAY–TO–DAY, AND SHALL BE RESPONSIBLE FOR ENSURING THAT THE EROSION CONTROL MEASURES REQUIRED BY THE EROSION CONTROL PLAN, DETAILS AND NOTES, ARE PROPERLY INSTALLED AND MAINTAINED. THE ONSITE EROSION CONTROL PLAN COORDINATOR SHALL KEEP A WRITTEN RECORD OF INSPECTIONS AND MAINTENANCE OF EROSION CONTROL FEATURES. A COPY OF THESE PLANS AND INSPECTION/MAINTENANCE RECORDS SHALL BE KEPT ONSITE AT ALL TIMES.
2. THE SMALLEST PRACTICAL AREA OF LAND SHALL BE DISTURBED AT ANY ONE TIME DURING DEVELOPMENT. WHEN LAND IS DISTURBED, THE DISTURBANCE SHALL BE KEPT TO THE SHORTEST PRACTICAL DURATION AS APPROVED BY THE OWNER'S REP.
3. DUST SHALL BE CONTROLLED WITH WATER DISTRIBUTED BY A TRUCK MOUNTED SPRAY BAR. CALCIUM CHLORIDE(AASHTO M 144) OR SODIUM CHLORIDE(AASHTO M 143) SHALL BE USED AS DIRECTED BY THE OWNER'S REP.
4. ALL EROSION AND STORMWATER CONTROL SYSTEMS SHALL BE INSPECTED ONCE EVERY 7 CALENDAR DAYS AND WITHIN 24 HOURS OF THE OCCURRENCE OF A STORM EVENT OF 0.5" OR GREATER. NEEDED REPAIRS SHALL BE MADE IMMEDIATELY. SEDIMENT DEPOSITS SHALL BE REMOVED AS THEY ACCUMULATE AND PLACED IN AREAS WHERE FURTHER EROSION IS UNLIKELY.
5. A WRITTEN REPORT, STAMPED BY A QUALIFIED ENGINEER OR A CPESC SPECIALIST, SHALL BE SUBMITTED TO THE NHDES WITHIN 24 HOURS OF EACH INSPECTION THAT:
   A) DESCRIBES THE PROGRESS OF THE PROJECT, INCLUDING WHETHER ALL CONDITIONS OF THE PERMIT ARE BEING MET AND, IF NOT, WHICH REQUIREMENTS ARE NOT BEING MET;
   B) IF ANY REQUIREMENTS ARE NOT BEING MET, AN EXPLANATION OF THE CORRECTIVE ACTION(S) THAT WILL BE OR ARE BEING TAKEN TO BRING THE PROJECT INTO COMPLIANCE WITH APPLICABLE REQUIREMENTS AND THE DEADLINE BY WHICH SUCH ACTIONS WILL BE COMPLETED; AND
   C) INCLUDES PHOTOGRAPHS OF THE SITE THAT ARE REPRESENTATIVE OF THE PROJECT; AND
6. RETAIN A COPY OF THE REPORT PREPARED PURSUANT TO (5), ABOVE, ON–SITE FOR REVIEW DURING SITE INSPECTIONS BY FEDERAL, STATE, AND LOCAL OFFICIALS
7. ALL PERIMETER CONTROLS SHALL BE INSTALLED PRIOR TO EARTH MOVING OPERATIONS.
8. DETENTION BASINS AND SWALES SHALL BE INSTALLED PRIOR TO ROUGH GRADING THE SITE.
9. ALL DITCHES AND SWALES SHALL BE STABILIZED PRIOR TO DIRECTING RUNOFF TO THEM.
10. ALL ROADWAYS AND PARKING LOTS SHALL BE STABILIZED WITHIN 72 HOURS OF ACHIEVING FINISHED GRADE.
11. ALL CUT AND FILL SLOPES SHALL BE SEEDED/LOAMED WITHIN 72 HOURS OF ACHIEVING FINISHED GRADE.
12. AN AREA SHALL BE CONSIDERED STABLE IF ONE OF THE FOLLOWING HAS OCCURRED:
    – BASE COURSE GRAVELS HAVE BEEN INSTALLED IN AREAS TO BE PAVED;
    – A MINIMUM OF 85% VEGETATED GROWTH HAS BEEN ESTABLISHED;
    – A MINIMUM OF 3" OF NON–EROSIVE MATERIAL SUCH AS STONE OR RIPRAP HAS BEEN INSTALLED; OR
    – EROSION CONTROL BLANKETS HAVE BEEN PROPERLY INSTALLED.
13. LOT DISTURBANCE OTHER THAN THAT SHOWN ON THE APPROVED PLANS SHALL NOT COMMENCE UNTIL AFTER THE ROADWAY HAS THE BASE COURSE TO DESIGN ELEVATION AND THE ASSOCIATED DRAINAGE IS COMPLETE AND STABLE.
14. APPROPRIATE SILTATION/EROSION/TURBIDITY CONTROLS SHALL BE IN PLACE PRIOR TO CONSTRUCTION, SHALL BE MAINTAINED DURING CONSTRUCTION, AND REMAIN IN PLACE UNTIL THE AREA IS STABILIZED. SILT FENCE(S) MUST BE REMOVED ONCE THE AREA IS STABILIZED.
15. DISCHARGE FROM DEWATERING OF WORK AREAS SHALL BE TO SEDIMENT BASINS THAT ARE:
    A) LOCATED IN UPLANDS;
    B) LINED WITH HAY BALES OR OTHER ACCEPTABLE SEDIMENT TRAPPING LINERS;
    C) SET BACK AS FAR AS POSSIBLE FROM WETLANDS AND SURFACE WATERS, IN ALL CASES WITH A MINIMUM OF 20 FEET OF UNDISTURBED VEGETATED BUFFER.
16. WITHIN THREE DAYS OF FINAL GRADING, ALL EXPOSED SOIL AREAS SHALL BE STABILIZED BY SEEDING AND MULCHING DURING THE GROWING SEASON, OR IF NOT WITHIN THE GROWING SEASON, BY MULCHING WITH TACK OR NETTING AND PINNING ON SLOPES STEEPER THAN 3:1.
17. WHERE CONSTRUCTION ACTIVITIES HAVE BEEN TEMPORARILY SUSPENDED WITHIN THE GROWING SEASON, ALL EXPOSED SOIL AREAS SHALL BE STABILIZED WITHIN 14 DAYS BY SEEDING AND MULCHING.
18. WHERE CONSTRUCTION ACTIVITIES HAVE BEEN TEMPORARILY SUSPENDED OUTSIDE THE GROWING SEASON, ALL EXPOSED AREAS SHALL BE STABILIZED WITHIN 14 DAYS BY MULCHING AND TACK. SLOPES STEEPER THAN 3:1 SHALL BE STABILIZED BY MATTING AND PINNING.
19. PROPER HEADWALLS SHALL BE CONSTRUCTED WITHIN SEVEN DAYS OF CULVERT INSTALLATION.
20. CULVERT OUTLETS SHALL BE PROTECTED IN ACCORDANCE WITH THE DES BEST MANAGEMENT PRACTICES FOR URBAN STORMWATER RUNOFF MANUAL (JANUARY 1996) AND THE STORMWATER MANAGEMENT AND EROSION AND SEDIMENT CONTROL HANDBOOK FOR URBAN AND DEVELOPING AREAS IN NEW HAMPSHIRE (AUGUST 1992).
21. THE CONTRACTOR RESPONSIBLE FOR COMPLETION OF THE WORK SHALL UTILIZE TECHNIQUES DESCRIBED IN THE NEW HAMPSHIRE STORMWATER MANUAL, VOLUME 3, EROSION AND SEDIMENT CONTROLS DURING CONSTRUCTION (DECEMBER 2008).
22. DO NOT PLACE THE BIORETENTION SYSTEM INTO SERVICE UNTIL ALL BMPS HAVE BEEN PLANTED AND ITS CONTRIBUTING AREAS HAVE BEEN FULLY STABILIZED.
23. DO NOT DISCHARGE SEDIMENT–LADEN WATERS FROM THE CONSTRUCTION ACTIVITIES (RUNOFF, WATER FROM EXCAVATIONS) TO BIORETENTION AREA DURING ANY STAGE OF CONSTRUCTION.
24. DO NOT TRAFFIC EXPOSED SOIL SURFACE WITH CONSTRUCTION EQUIPMENT. IF FEASIBLE, PERFORM EXCAVATIONS WITH EQUIPMENT POSITIONED OUTSIDE THE LIMITS OF THE INFILTRATION COMPONENTS OF THE SYSTEM.

EROSION CONTROL CONSTRUCTION SEQUENCE:

1. THE "ON–SITE EROSION CONTROL PLAN COORDINATOR" SHALL BE THE GENERAL CONTRACTOR, THIS INDIVIDUAL SHALL BE PRESENT ON SITE FROM DAY TO DAY, AND SHALL BE RESPONSIBLE FOR ENSURING THAT THE EROSION CONTROL MEASURES REQUIRED BY THE EROSION CONTROL PLAN, DETAILS AND NOTES, ARE PROPERLY INSTALLED AND MAINTAINED. THE ONSITE EROSION CONTROL PLAN COORDINATOR SHALL KEEP A WRITTEN RECORD OF INSPECTIONS AND MAINTENANCE OF EROSION CONTROL FEATURES. A COPY OF THESE PLANS AND INSPECTION/MAINTENANCE RECORDS SHALL BE KEPT ONSITE AT ALL TIMES.
2. HOLD PRE–CONSTRUCTION CONFERENCE AT LEAST ONE WEEK PRIOR TO STARTING CONSTRUCTION, WITH THE CONTRACTOR, OWNER, AND ENGINEER. THE CONTRACTOR SHALL BE RESPONSIBLE FOR ESTABLISHING ALL EROSION CONTROL MEASURES DELINEATED ON THE PLANS AND ANY ADDITIONAL MEASURES THAT ARE NECESSARY TO MINIMIZE EROSION. THE CONTRACTOR SHALL HAVE EROSION CONTROL MATERIALS AND INSTALLATION EQUIPMENT ON SITE AT ALL TIMES.
3. IF POSSIBLE, ALL TEMPORARY EROSION CONTROL MEASURES REQUIRED FOR WORK PROPOSED DURING THE WINTER (BETWEEN OCTOBER 15 AND MAY 1), SHALL BE INSTALLED PRIOR TO OCTOBER 1.
4. PRIOR TO ANY OTHER WORK, SILT FENCES SHALL BE INSTALLED GENERALLY 10 FEET FROM THE BASE OF THE FILL SLOPES, OR AS SHOWN ON THE EROSION CONTROL PLAN. THESE SHALL REMAIN IN PLACE AND BE MAINTAINED UNTIL THE PROJECT SITE HAS BEEN STABILIZED. SEDIMENT SHALL BE REMOVED FROM BEHIND THE SILT FENCE WHEN IT BECOMES 6 INCHES DEEP AT THE FENCE. THE SILT FENCE WILL BE REPAIRED AS NECESSARY TO MAINTAIN A PROPER SEDIMENT BARRIER.
5. INSTALL TEMPORARY GRAVEL CONSTRUCTION ENTRANCE/EXIT.
6. INSTALL INLET PROTECTION ON EXISTING AND NEW CATCH BASINS.
7. ROUGH GRADE AND STOCKPILE TOPSOIL SURROUNDED BY SILT FENCE.
8. STABILIZE EXPOSED SLOPES AND SOILS AS SOON AS GRADED, AND MAINTAIN UNTIL ADEQUATELY VEGETATED.
9. COMPLETE FINAL GRADING OF SITE. PLACE TOPSOIL AND PERMANENTLY VEGETATE, LANDSCAPE, AND MULCH.
10. AFTER THE SITE IS APPROVED BY THE ENGINEER AS ADEQUATELY STABILIZED, REMOVE ALL TEMPORARY MEASURES AND INSTALL PERMANENT VEGETATION ON THE DISTURBED AREAS.

TEMPORARY/CONSTRUCTION EROSION CONTROL MEASURES:

1. LIMIT LENGTH OF EXPOSURE OF UNSTABILIZED SOIL TO 45 DAYS OR LESS.
2. HAY SHALL NOT BE USED.
3. DOUBLE ROW OF STRAW WATTLES SHALL BE INSTALLED ALONG THE WETLAND BOUNDARY. THESE SHALL REMAIN IN PLACE UNTIL THE PROJECT SITE HAS BEEN STABILIZED. SEDIMENT SHALL BE REMOVED FROM BEHIND THE STRAW WATTLES WHEN IT BECOMES 6 INCHES DEEP. THE PERIMETER CONTROL WILL BE REPAIRED AS NECESSARY TO MAINTAIN A PROPER SEDIMENT BARRIER.
4. INSTALL STONE CHECK DAMS IN GRASS–LINED SWALES 50 FEET ON CENTER TO PREVENT SILT FROM WASHING INTO THE DRAINAGE SYSTEM DURING CONSTRUCTION. SEDIMENT SHALL BE REMOVED FROM BEHIND THE DAMS WHEN IT BECOMES 6 INCHES DEEP. STONE CHECK DAMS SHALL BE REMOVED WHEN VEGETATION IS ESTABLISHED.
5. DROP INLET PROTECTION SHALL BE PROVIDED AROUND ALL EXISTING AND PROPOSED CATCH BASINS. PROTECTION SHALL REMAIN UNTIL ALL DISTURBED AREAS ARE STABILIZED. SEDIMENT SHALL BE REMOVED FROM DROP INLET PROTECTION WHEN THE STORAGE CAPACITY HAS BEEN APPROXIMATELY 50% FILLED. GRAVEL WILL BE CLEANED OR REPLACED WHEN IT NO LONGER DRAINS PROPERLY.
6. EXCAVATED MATERIAL FROM EARTH EXCAVATION AND DITCH DIGGING SHALL BE DISPOSED OF OFFSITE OR USED FOR PROJECT FILL MATERIAL IF DETERMINED SUITABLE BY THE OWNER'S REPRESENTATIVE.
7. STOCKPILED MATERIAL (TOPSOIL, BORROW, ETC.) SHALL HAVE SILT FENCE CONSTRUCTED AROUND THE PERIMETER. THE STOCKPILED MATERIAL SHALL BE SEEDED AND MULCHED AS SOON AS POSSIBLE TO PREVENT SOIL EROSION AND SEDIMENTATION OFF SITE. LOCATE STOCKPILES ON THE UPHILL SIDE OF DISTURBED AREAS, IF POSSIBLE. DURING WINDY CONDITIONS, STOCKPILED MATERIAL SHALL BE COVERED OR WATERED APPROPRIATELY TO PREVENT WIND EROSION.

PERMANENT EROSION CONTROL MEASURES:

1. GRASS LINED SWALES SHALL BE TOP SOILED, SODDED AND FERTILIZED AREAS WHICH EXHIBIT SIGNS OF EROSION SHALL BE RE–SODDED IMMEDIATELY AND MAINTAINED UNTIL SOD HAS PERMANENT HOLD AND IS HEALTHY.
2. WHEN CONSTRUCTION IS COMPLETED IN AN AREA, IT SHALL BE IMMEDIATELY TOP SOILED, SEEDED, FERTILIZED AND MULCHED.
3. THE CONTRACTOR SHALL BE RESPONSIBLE FOR THE CONTINUED MAINTENANCE OF ALL DISTURBED AREAS, INCLUDING WATERING, UNTIL THE AREA IS INSPECTED AND ACCEPTED BY THE OWNER OR ENGINEER.
4. AFTER THE SITE IS STABILIZED, REMOVE ALL TEMPORARY MEASURES AND INSTALL PERMANENT VEGETATION ON THE DISTURBED AREAS.
5. RE–SEEDING SHALL BE DONE UNTIL ALL AREAS ARE COMPLETELY COVERED WITH A MATURE STRAND OF GRASS. AN AREA SHALL BE CONSIDERED COVERED WHEN THE ENTIRE SURFACE CONTAINS A VERDUROUS STAND OF GRASS. AREAS THAT, IN THE OPINION OF THE ENGINEER, ARE PREDOMINATELY WEEDS SHALL BE PLOWED UP, FINE GRADED, FERTILIZED AND RE–SEEDED IN THE MANNER SPECIFIED PREVIOUSLY, EXERCISING CAUTION NOT TO CAUSE DAMAGE TO NEW OR EXISTING PLANT MATERIAL.

STATE OF NEW HAMPSHIRE
NICHOLAS A. FIORE
No. 13286
LICENSED
PROFESSIONAL ENGINEER
Stamp

No.	Description	Date

ENGINEERING VENTURES PC
208 Flynn Avenue, Suite 2A, Burlington, VT 05401 • 802-863-6225
85 Mechanic Street, Suite E2-3, Lebanon, NH 03766 • 603-442-9333
414 Union Street, Schenectady, NY 12305 • 518-630-9614
www.engineeringventures.com

SAXON PARTNERS
25 RECREATION PARK DRIVE, SUITE 204
HINGHAM, MA 02043
781-875-3300
802-343-6330

Sheet Title: EROSION PREVENTION AND SEDIMENT CONTROL DETAILS

Project Title: MAREK 2
402 MT SUPPORT ROAD
CITY OF LEBANON, GRAFTON COUNTY, NEW HAMPSHIRE

EV Project #	22715
Drawn By:	JWF
Checked By:	NAF
Scale:	NO SCALE
Date:	09/11/2023

C4.7

PLOTTED: 9/9/2023 8:17 AM

S:\PROJECTS\0-2022\2715 NH 402 MT SUPPORT, SAXON\DWG\SHEET FILES\22715 C4.X CONSTRUCTION DETAILS.DWG

LANDSCAPE REQUIREMENTS – PARKING AREA AND PERIMETER AREA CALCULATIONS

SCALE: 1" = 60'-0"

DRAFT

60' 0' 60' 120'

SCALE: 1" = 60FT

NORTH

PERIMETER AREA CALCULATIONS

(PA 1)	NORTH	NORTH PERIMETER AREA: ± 9,000 SF
(PA 2)	EAST	EAST PERIMETER AREA: ± 27,470 SF
(PA 3)	SOUTH	SOUTH PERIMETER AREA: ± 19,200 SF
(PA 4)	WEST	WEST PERIMETER AREA: ± 13,500 SF

NOTE: SEE PLAN L1.1 FOR PROPOSED LANDSCAPE REQUIREMENTS

PARKING AREA CALCULATIONS

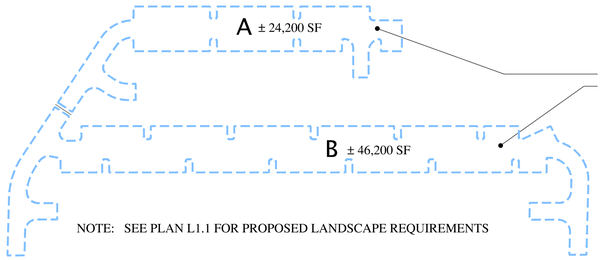

AREA OF PARKING LOT A: 24,200 SF
AREA OF PARKING LOT B: 46,200 SF

TOTAL AREA: 70,400 SF TOTAL

NOTE: SEE PLAN L1.1 FOR PROPOSED LANDSCAPE REQUIREMENTS

PERIMETER
EAST
AREA PA 2a = 8,875 SF
AREA PA 2b = 15,430 SF
AREA PA 2c = 3,165 SF

TOTAL: PA 2 = 27,470 SF

EAST PERIMETER AREA 2c
AREA PA2c: 3,165

EAST PERIMETER AREA 2b
AREA PA2b: 15,430 SF

EAST PERIMETER AREA 2a
AREA 2a: 8,875 SF

PERIMETER
SOUTH
AREA PA 3 = 19,200 SF

AREA PA3: 19,200 SF

SOUTH PERIMETER

PERIMETER
NORTH
AREA PA 1 = ±9,000 SF

BUILDING 3

AMENITY BUILDING

BUILDING 1

BUILDING 2

PERIMETER
WEST
AREA PA 4 = 13,500 SF

Stamp

Rev. No.	Description	Chkd.

ParkArchitecture.com
3 School House Lane, Suite #1 Elma NH 03750
Tel: 603-543-3400 Mobile: 617-905-0467
Email: parkarchitecture@gmail.com

Client:
SAXON PARTNERS
25 RECREATION PARK DRIVE, SUITE 204
HINGHAM, MA 02043
781-875-3300

Sheet Title: LANDSCAPE REQUIREMENTS

Project Title: MAREK 2
402 MT SUPPORT ROAD
CITY OF LEBANON, GRAFTON COUNTY, NEW HAMPSHIRE

PA Project #	2315
Checked By:	PS
Drawn By:	PS
Scale:	1"=60'
Date:	09/11/2023

L1.0

PERIMETER LANDSCAPE REQUIREMENTS

6.2.B. CALCULATIONS FOR SQUARE FOOTAGE OF PERIMETER LANDSCAPING:

6.2.B.2. PERIMETER LANDSCAPING SHALL BE PLANTED AT A MINIMUM WITH ONE (1) SHADE TREE PLUS A MIX OF SHRUBS AND UNDERSTORY TREES TOTALING AT LEAST 5 PLANTS FOR EACH 600 SQUARE FEET, UNLESS THE PLANNING BOARD DETERMINES THAT A SEMI-OPAQUE OR AN OPAQUE BUFFER IS REQUIRED.

6.2.B.4. AT THE TIME OF PLANTING, ALL DECIDUOUS TREES SHALL BE A MINIMUM 2.5" TO 3" INCH CALIPER, MEASURED 6 INCHES ABOVE THE FINISH GRADE LEVEL; ALL EVERGREEN TREES SHALL BE A MINIMUM OF 6 TO 7 FEET IN HEIGHT.

6.2.B.5. SHRUBS SHALL BE PLANTED AS A MIX, RANGING FROM 50% TO 70% FLOWERING, WITH THE REMAINDER BEING EVERGREEN. AT THE TIME OF PLANTING, ALL SHRUBS WHETHER DECIDUOUS OR EVERGREEN, SHALL BE 24 TO 30 INCHES IN HEIGHT AND/OR 18 TO 24 INCHES IN SPREAD.

(PA 1) NORTH	NORTH PERIMETER AREA: ± 9,000 SF PA 1 TREES REQUIRED: 15 NEW TREES PROPOSED: 20 PT # OF PERIMETER EVERGREEN TREES: 4 = 20% (25% MAXIMUM) # OF PERIMETER DECIDUOUS TREES: 16 = 80% PA 1 SHRUBS REQUIRED: 75 SHRUBS PROPOSED: 75 PF & PE MIN. # OF PERIMETER FLOWERING SHRUBS REQUIRED: 38-53 (50 TO 70%) MIN. # OF PERIMETER EVERGREEN SHRUBS REQUIRED: 23-38 (30 TO 50%) NUMBER OF PERIMETER FLOWERING SHRUBS PROPOSED: 38 PF NUMBER OF PERIMETER EVERGREEN SHRUBS PROPOSED: 37 PE } 75
(PA 2) EAST	EAST PERIMETER AREA: ± 27,470 SF WAIVER REQUESTED FOR NORTH PERIMETER WITH PRESERVATION OF EXISTING FORESTED LANDSCAPING TO REMAIN (SEE PLAN).
(PA 3) SOUTH	SOUTH PERIMETER AREA: ± 19,200 SF WAIVER REQUESTED FOR SOUTH PERIMETER WITH PRESERVATION OF EXISTING FORESTED LANDSCAPING TO REMAIN (SEE PLAN).
(PA 4) WEST	WEST PERIMETER AREA: ± 13,500 SF PA 4 TREES REQUIRED: 23 NEW TREES PROPOSED: 42 PT # OF PERIMETER EVERGREEN TREES: 10 = 25% (25% MAXIMUM) # OF PERIMETER DECIDUOUS TREES: 32 = 75% PA 4 SHRUBS REQUIRED: 113 SHRUBS PROPOSED: 167 PF & PE MIN. # OF PERIMETER FLOWERING SHRUBS REQUIRED: 86-120 (50 TO 70%) MIN. # OF PERIMETER EVERGREEN SHRUBS REQUIRED: 52-86 (30 TO 50%) NUMBER OF PERIMETER FLOWERING SHRUBS PROPOSED: 86 PF NUMBER OF PERIMETER EVERGREEN SHRUBS PROPOSED: 88 PE } 171
NOTE:	SEE PLANS L2.1 AND L2.2 FOR DETAILED LANDSCAPE PLANS.

APPENDIX A: OUTDOOR BIKE STORAGE

RESIDENTIAL SHORT-TERM STORAGE - 15% OF UNITS AT MINIMUM
NUMBER OF RESIDENTIAL UNITS: 204 = 31 MINIMUM OUTDOOR BIKE PARKING SPACES
NUMBER OF BIKE PARKING SPACES PROPOSED: 32

NOTE: SEE ARCHITECTURAL PLANS FOR LONG-TERM BIKE STORAGE

PARKING AREA SHADING REQUIREMENTS

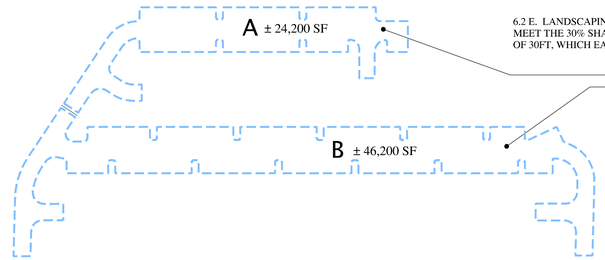

6.2 E. LANDSCAPING OF PARKING AREAS: 6.2 E6a. THE NUMBER OF TREES REQUIRED TO MEET THE 30% SHADING REQUIREMENT SHALL BE CALCULATED ON A MIN CROWN DIAMETER OF 30FT, WHICH EACH TREE SHALL HAVE ATTAINED WITHIN 10YEARS FROM PLANTING.

AREA OF PARKING LOT A: 24,200 SF
AREA OF PARKING LOT B: 46,200 SF

TOTAL AREA: 70,400 SF TOTAL

SHADING REQUIRED :
± 70,400 X 30% = ± 21,120 MINIMUM

SHADING PROVIDED:
24 FULL SHADE TREES (707) = 16,968 SF
26 HALF SHADE TREES (353) = 9,178 SF

TOTAL: 26,146 SF > 30%

PLANTING KEY

PERIMETER PLANTING KEY

PT = PERIMETER TREE
PF = PERIMETER FLOWERING SHRUB
PE = PERIMETER EVERGREEN SHRUB

SHADE PLANTING KEY

ST = SHADE TREE
REQUIRED SHADE TREE PLANTINGS FOR PARKING AREA SHADING REQUIREMENTS

SEE PLANTING PLAN SHEET L2.1 AND L2.2 FOR LOCATION OF ALL PROPOSED TREE & SHRUB PLANTINGS

40' 0' 40' 80'
SCALE: 1" = 40FT

NORTH

SEC. 6.2 LANDSCAPING STANDARDS

6.2 A. PURPOSE - LANDSCAPING SHALL BE REQUIRED AROUND THE PERIMETER OF THE PARCEL, IN THE PARKING AREA, AND AROUND THE BUILDINGS.

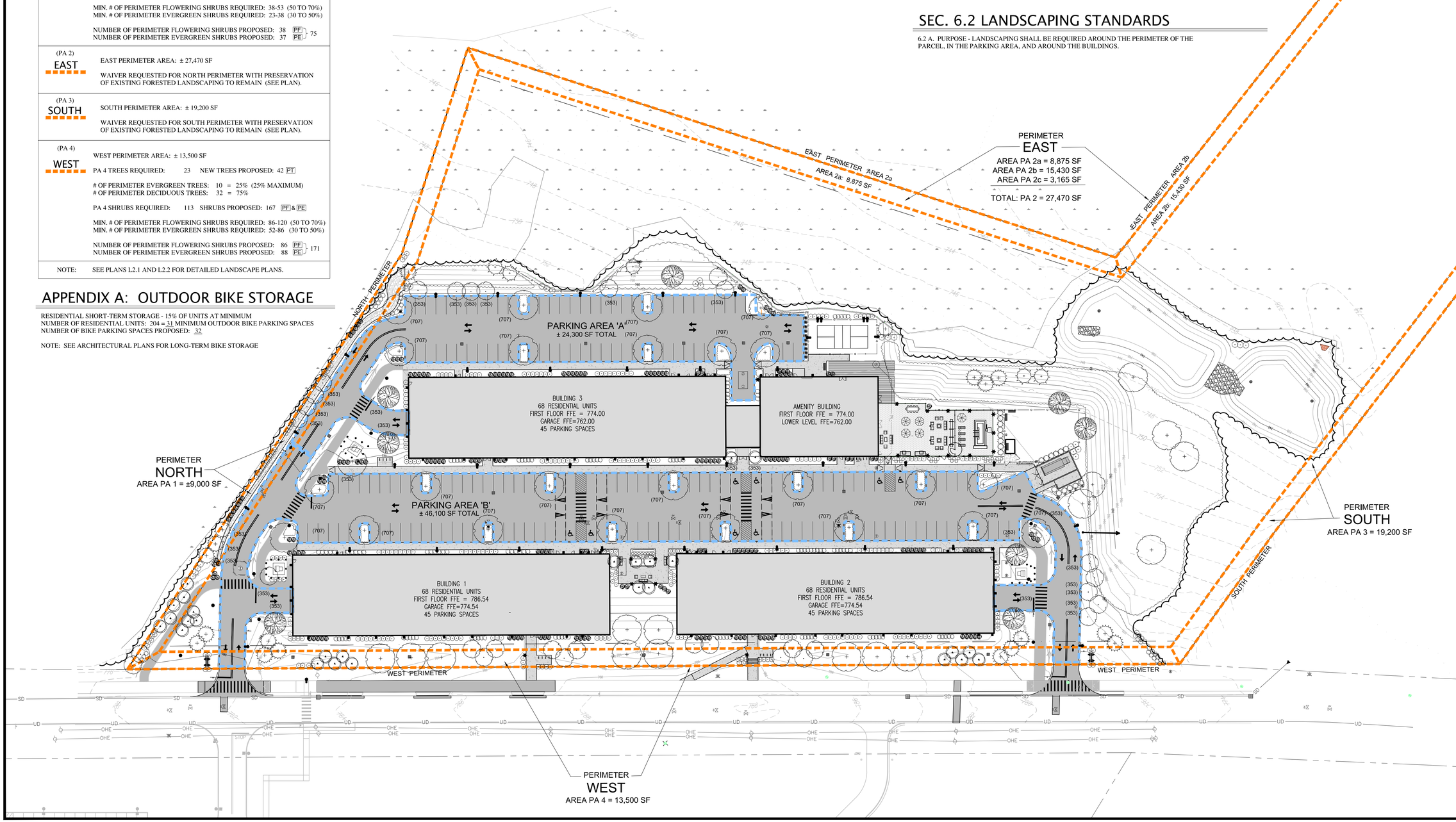

Stamp

Rev. No.	Description	Chkd.

ParkArchitecture.com
3 School House Lane, Suite #1 Elma NH 03750
Tel: 603-543-3400 Mobile: 617-905-0467
Email: parkarchitecture@gmail.com

Client:
SAXON PARTNERS
25 RECREATION PARK DRIVE, SUITE 204
HINGHAM, MA 02043
781-875-3300

Sheet Title: LANDSCAPE REQUIREMENTS

Project Title: MAREK 2
402 MT SUPPORT ROAD
CITY OF LEBANON, GRAFTON COUNTY, NEW HAMPSHIRE

PA Project #	2315
Checked By:	PS
Drawn By:	PS
Scale:	1"=40'
Date:	09/11/2023

L1.1

DRAFT

20' 0' 20' 40'

SCALE: 1" = 20FT

NORTH

PLANTING KEY

PERIMETER PLANTING KEY

- PT = PERIMETER TREE
- PF = PERIMETER FLOWERING SHRUB
- PE = PERIMETER EVERGREEN SHRUB

SHADE PLANTING KEY

- ST = SHADE TREE

REQUIRED SHADE TREE PLANTINGS FOR PARKING AREA SHADING REQUIREMENTS

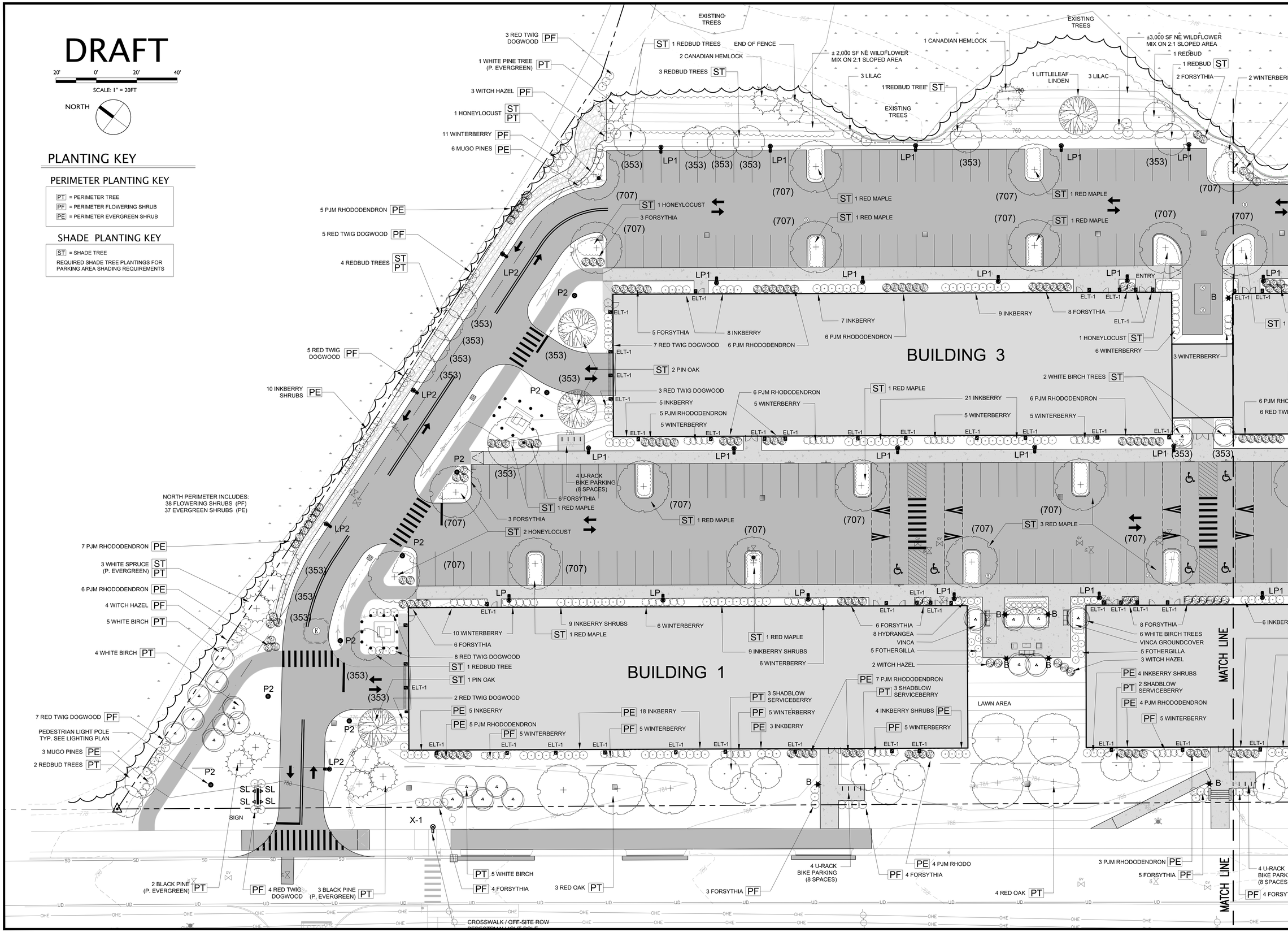

Stamp

Rev. No.	Description	Chkd.

ParkArchitecture.com
3 School House Lane, Suite #1 Elma NH 03750
Tel: 603-543-3400 Mobile: 617-905-0467
Email: parkarchitecture@gmail.com

Client:
SAXON PARTNERS
25 RECREATION PARK DRIVE, SUITE 204
HINGHAM, MA 02043
781-875-3300

Sheet Title: SITE LANDSCAPE PLAN (1 OF 2)

Project Title: MAREK 2
402 MT SUPPORT ROAD
CITY OF LEBANON, GRAFTON COUNTY, NEW HAMPSHIRE

PA Project #	2315
Checked By:	PS
Drawn By:	PS
Scale:	1"=20'
Date:	09/11/2023

L2.0

DRAFT

20' 0' 20' 40'
SCALE: 1" = 20FT

NORTH

EAST AREA

WILDFLOWER SEED AREA
REDBUD ST
FORSYTHIA
2 WINTERBERRY
1 REDBUD ST
3 FORSYTHIA
4FT HIGH FENCE
10 SPREDING YEW
5 WINTERBERRY
5 BRANDYWINE VIBURNUM
SPORT LP
60FT X 30FT PICKLEBALL COURT (SEE DETAILS)
10FT HIGH & 4' H BLACK VINYL CHAIN LINK FENCE TO SURROUND COURT. SEE ENLARGEMENT
5 BRANDYWINE VIBURNUM
2 SPORT LIGHT POLES ON SEPARATE CIRCUIT (SEE LIGHTING PLAN)
1 WHITE PINE
4FT HIGH FENCE
3 WITCH HAZEL
EXISTING TREES
3 WHITE SPRUCE
2 CANADIAN HEMLOCK
2 LITTLELEAF LINDEN
1 SYCAMORE
3 WITCH HAZEL
PICKLEBALL COURT
2SP1
SP1
LP1
ELT-1
SEATING TABLE & UMBRELLA
(2) GAS BBQ & COUNTER
42" X 10' OUTDOOR DINING TABLE
42" GAS FIRE PIT
LIGHT POLE SUPPORT
PLANTER & ARBOR
48" HT. FENCE
SPA
ADA LIFT AND TRANSFER STATION
6 FORSYTHIA
1 HONEYLOCUST
2 FORSYTHIA
AMENITY BUILDING
6 PJM RHODODENDRON
6 RED TWIG DOGWOOD
6 FORSYTHIA
8FT X 21FT SPA
BENCHES TYP.
14 AMERICAN ARBORVITAE
WATER STATION AND SPIGOT
8FT X 12FT SHADE STRUCTURE
PET WASTE STATION
GATE
2 SYCAMORE
5 LILAC
6 AMERICAN ARBORVITAE
± 24,000 SF NE WILDFLOWER MIX ON 2:1 SLOPED AREA
2 HONEYLOCUST
1 SYCAMORE
4 U-RACK BIKE PARKING (8 SPACES)
7 SPIREA
3 RED MAPLE ST
19 SPIREA
10 CLETHRA
5 FOTHERGILLA
2 RED MAPLE ST
STEEL EDGING
P2
LP2
LAWN AREA
1 HONEYLOCUST
ST 5 REDBUD TREES
PF 4 RED TWIG DOGWOOD
PF 7 RED TWIG DOGWOOD
SOUTH PERIMETER
PERIMETER
SOUTH
AREA PA 3 = 19,200 SF
MATCH LINE
6 INKBERRY
15 WINTERBERRY
9 INKBERRY
5 PJM RHODO
4 FOTHERGILLA
5 PJM RHODO
4 RED TWIG DOGWOOD
PE 4 PJM RHODO
PT 4 SHADBLOW SERVICEBERRY
PE 4 INKBERRY
PF 5 WINTERBERRY
BUILDING 2
ST 2 PIN OAK
5 RED TWIG DOGWOOD
PE 18 INKBERRY
PF 5 WINTERBERRY
PF 5 WINTERBERRY
PE 5 PJM RHODO
SL SL
SL SL
SIGN
WEST PERIMETER
4 U-RACK BIKE PARKING (8 SPACES)
PF 4 FORSYTHIA
3 RED OAK PT
PT 5 WHITE BIRCH
3 BLACK PINE (P. EVERGREEN) PT
2 BLACK PINE (P. EVERGREEN) PT
11 WINTERBERRY PF

PLANTING KEY

PERIMETER PLANTING KEY

PT = PERIMETER TREE
PF = PERIMETER FLOWERING SHRUB
PE = PERIMETER EVERGREEN SHRUB

SHADE PLANTING KEY

ST = SHADE TREE
REQUIRED SHADE TREE PLANTINGS FOR PARKING AREA SHADING REQUIREMENTS

SEE PLANTING PLAN SHEET L2.1 AND L2.2 FOR LOCATION OF ALL PROPOSED TREE & SHRUB PLANTINGS

Stamp

Rev. No.	Description	Chkd.

ParkArchitecture.com
3 School House Lane, Suite #1 Elma NH 03750
Tel: 603-543-3400 Mobile: 617-905-0467
Email: parkarchitecture@gmail.com

Client:
SAXON PARTNERS
25 RECREATION PARK DRIVE, SUITE 204
HINGHAM, MA 02043
781-875-3300

Sheet Title: SITE LANDSCAPE PLAN (2 OF 2)

Project Title: MAREK 2
402 MT SUPPORT ROAD
CITY OF LEBANON, GRAFTON COUNTY, NEW HAMPSHIRE

PA Project #	2315
Checked By:	PS
Drawn By:	PS
Scale:	1"=20'
Date:	09/11/2023

L2.1

Stamp

Rev. No.	Description	Chkd.

ParkArchitecture.com
3 School House Lane, Suite #1 Elma NH 03750
Tel: 603-543-3400 Mobile: 617-905-0467
Email: parkarchitecture@gmail.com

Client:
SAXON PARTNERS
25 RECREATION PARK DRIVE, SUITE 204
HINGHAM, MA 02043
781-875-3300

Sheet Title:
LANDSCAPE COLOR PLAN

Project Title:
MAREK 2
402 MT SUPPORT ROAD
CITY OF LEBANON, GRAFTON COUNTY, NEW HAMPSHIRE

PA Project #	2315
Checked By:	PS
Drawn By:	PS
Scale:	1"=30'
Date:	09/11/2023

L2.2

SITE ENLARGEMENT PLAN: PICKLEBALL COURT AREA

SCALE: 1" = 5'-0"

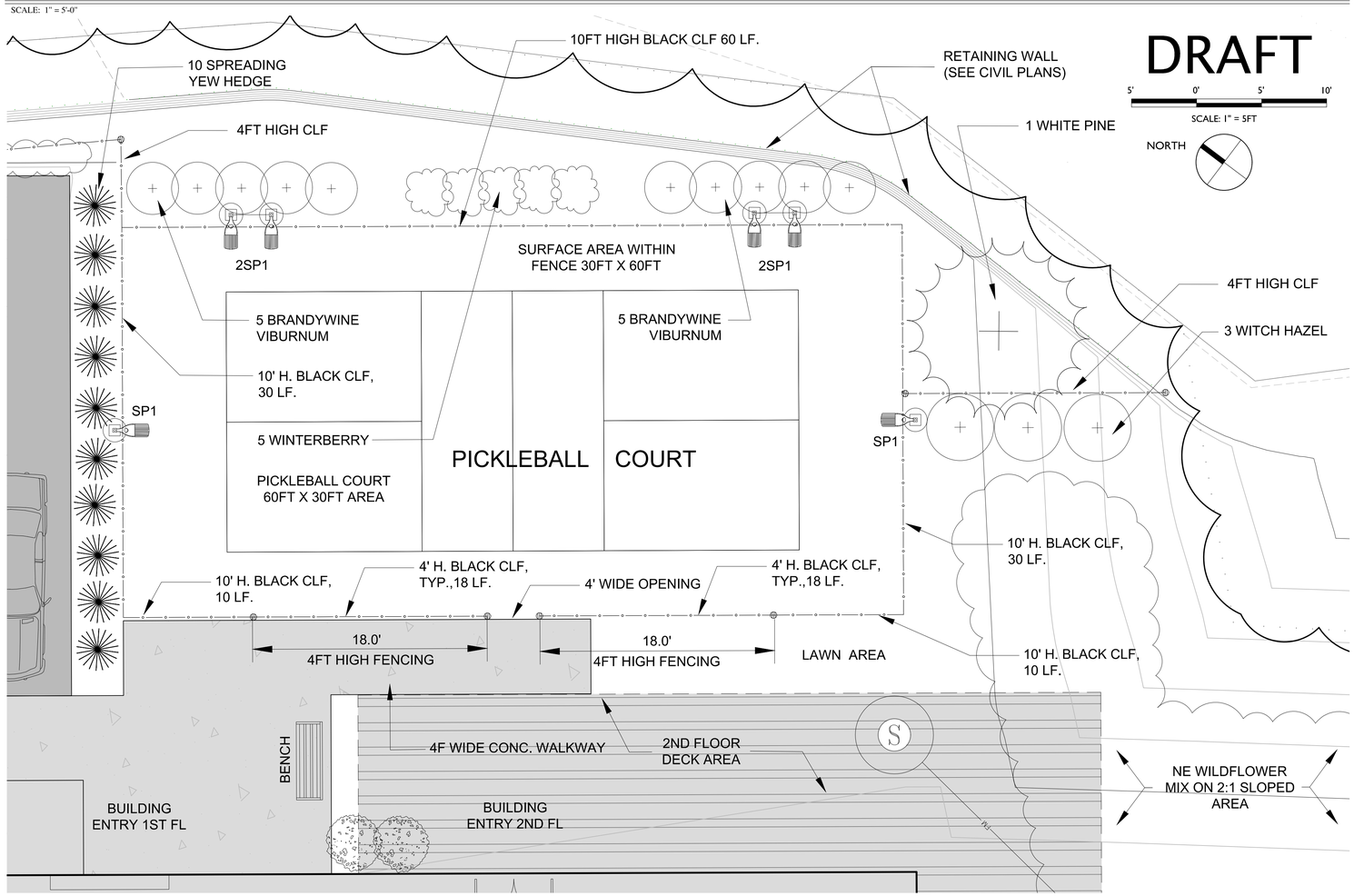

PICKLEBALL REFERENCE IMAGES

NOT TO SCALE

PICKLEBALL COURT LAYOUT AND COURT SPECIFICATIONS

NOT TO SCALE

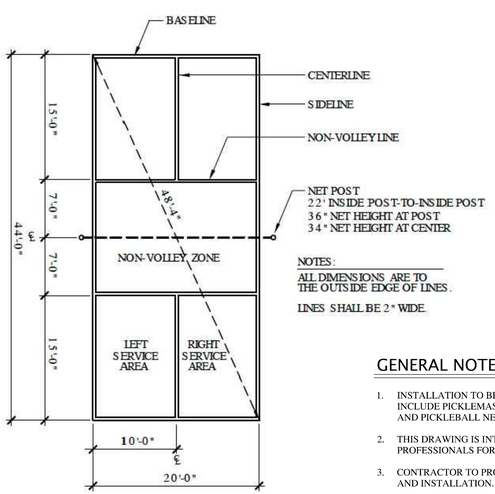

NET POST
22' INSIDE POST-TO-INSIDE POST
36" NET HEIGHT AT POST
34" NET HEIGHT AT CENTER

NOTES:
ALL DIMENSIONS ARE TO THE OUTSIDE EDGE OF LINES.
LINES SHALL BE 2" WIDE.

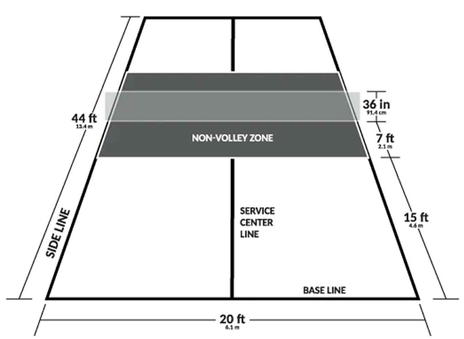

GENERAL NOTES:

1. INSTALLATION TO BE COMPLETED IN ACCORDANCE WITH MANUFACTURER'S SPECIFICATIONS. CONTRACGTOR SHALL INCLUDE PICKLEMASTER COLOR SEAL COATING ABOVE ASPHALT SURFACE. AND INCLUDE INSTALLATION OF NET POSTS AND PICKLEBALL NET.
2. THIS DRAWING IS INTENDED FOR USE BY ARCHITECTS, ENGINEERS, CONTRACTORS, CONSULTANTS AND DESIGN PROFESSIONALS FOR PLANNING PURPOSES ONLY. THIS DRAWING IS NOT TO BE USED FOR CONSTRUCTION.
3. CONTRACTOR TO PROVIDE SHOP DRAWING TO LANDSCAPE ARCHITECT FOR APPROVAL PRIOR TO ORDERING MATERIALS AND INSTALLATION.

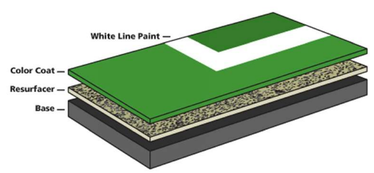

COLOR SEAL COATING / SURFACING NOTES:

1. SEE CIVIL PLANS FOR ASPHALT INSTALLATION / BIT. CONCRETE INSTALLATION DETAIL FOR SLAB INSTALLATION.
2. CONTRACTOR SHALL APPLY ACRYLIC SPORTMASTER PICKLEBALL COURT SURFACING SYSTEM BY PICKLEMASTER / SPORT MASTER SPORT SURFACING OR EQUAL. INSTALL AS PER MANUF. RECOMMENDATIONS.
3. WWW.SPORTMASTER.NET/PICKLEBALL-COURT-SURFACES-CONSTRUCTION
4. SURFACE COLORS SHALL BE SELECTED BY OWNER.

BLACK VINYL CLF INSTALLATION DETAIL

NOT TO SCALE

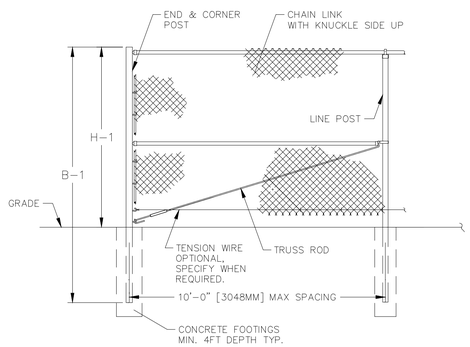

FENCE HEIGHT	END & CORNER POSTS	
NOMINAL HEIGHT	B-1 BAR LENGTH	H-1 HEIGHT ABOVE GRADE
10'-0"	13'-0"	10'-0 5/8"

SEE LANDSCAPE AND CIVIL PLANS FOR LOCATIONS AND HEIGHT

NOTES:

1. SEE PLAN FOR LOCATION, HEIGHT, AND LENGTH OF PROPOSED FENCING. (BEGIN / END CLF LABELS). FENCE HEIGHT VARIES.
2. ALL CHAIN LINK FABRIC SHALL BE BLACK VINYL COATED.
3. ALL POSTS, BARS, RODS & HARDWARE SHALL BE BLACK POWDER COATED STEEL FENCE.
4. CONTRACTOR SHALL INCLUDE TOP AND BOTTOM RAILS ON ALL FENCING. 10FT TALL FENCING SHALL INCLUDE ADDITIONAL MID-RAIL SUPPORT.
5. MANUFACTURER SHALL BE ANCHOR FENCE OR APPROVED EQUAL.
6. INSTALL FABRIC WITH KNUCKLE SIDE UP AND POINTED END DOWN.
7. CONTRACTOR TO PROVIDE SHOP DRAWING TO LANDSCAPE ARCHITECT FOR APPROVAL PRIOR TO ORDERING MATERIALS AND INSTALLATION.

Stamp

Rev. No.	Description	Chkd.

ParkArchitecture.com
3 School House Lane, Suite #1 Elma NH 03750
Tel: 603-543-3400 Mobile: 617-905-0467
Email: parkarchitecture@gmail.com

Client:
SAXON PARTNERS
25 RECREATION PARK DRIVE, SUITE 204
HINGHAM, MA 02043
781-875-3300

Sheet Title: SITE ENLARGEMENT PLAN (1 OF 3)

Project Title: MAREK 2
402 MT SUPPORT ROAD
CITY OF LEBANON, GRAFTON COUNTY, NEW HAMPSHIRE

PA Project #	2315
Checked By:	PS
Drawn By:	PS/KO
Scale:	1"=5'
Date:	09/11/2023

L3.0

SITE ENLARGEMENT PLAN: AMENITY BUILDING PATIO AREA

SCALE: 1" = 5'-0"

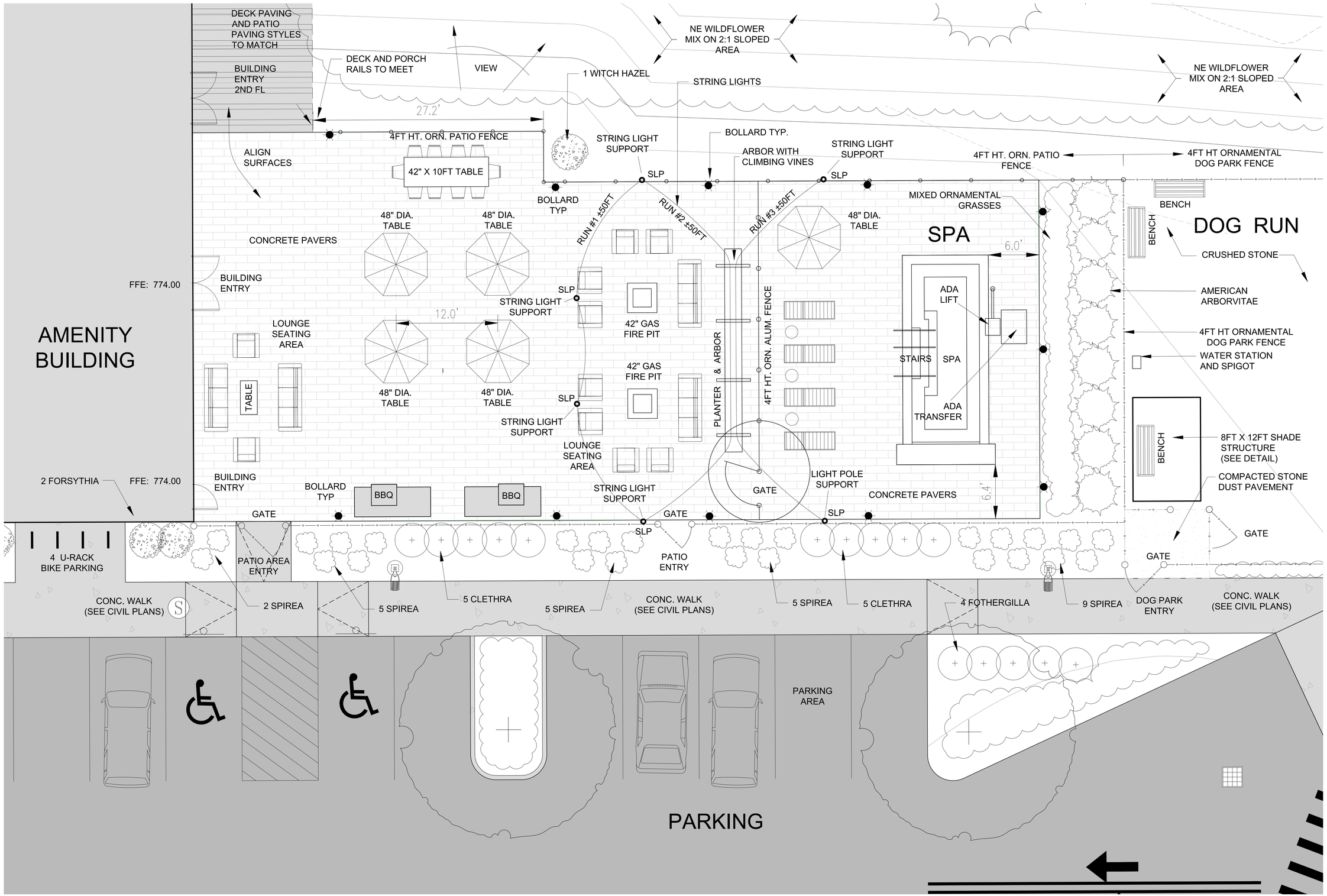

Stamp

Rev. No.	Description	Chkd.

ParkArchitecture.com
3 School House Lane, Suite #1 Elma NH 03750
Tel: 603-543-3400 Mobile: 617-905-0467
Email: parkarchitecture@gmail.com

Client:
SAXON PARTNERS
25 RECREATION PARK DRIVE, SUITE 204
HINGHAM, MA 02043
781-875-3300

Sheet Title: SITE ENLARGEMENT PLAN (2 OF 3)

Project Title: MAREK 2
402 MT SUPPORT ROAD
CITY OF LEBANON, GRAFTON COUNTY, NEW HAMPSHIRE

PA Project #	2315
Checked By:	PS
Drawn By:	PS/KO
Scale:	1"=5'
Date:	09/11/2023

L3.1

SITE ENLARGEMENT PLAN: PLAZA AREA BETWEEN BUILDING #1 AND BUILDING #2

SCALE: 1" = 5'-0"

DRAFT

5' 0' 5' 10'

SCALE: 1" = 5FT

NORTH

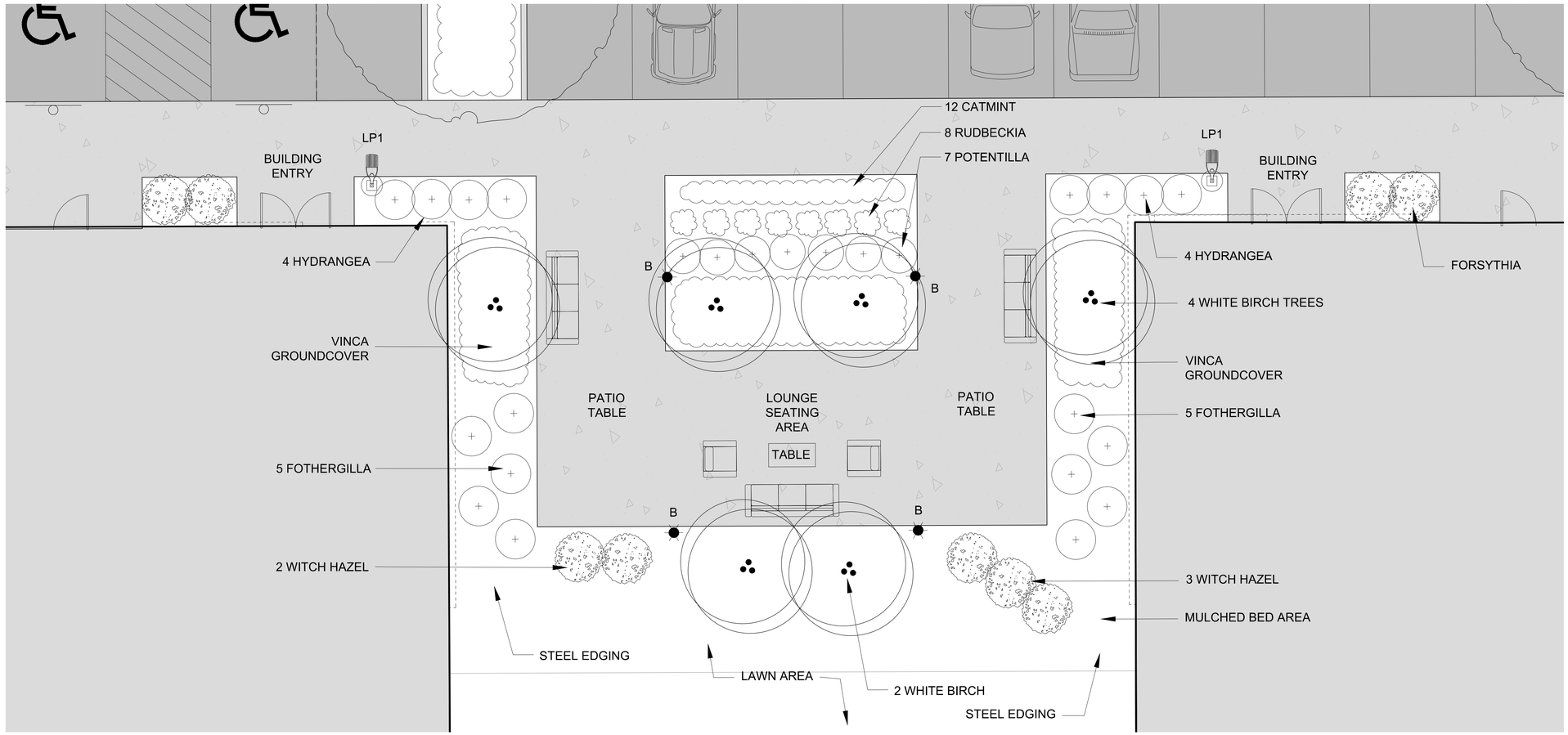

STEEL LANDSCAPE EDGING DETAIL

NOT TO SCALE

STEEL LANDSCAPE EDGING AS MANUFACTURED BY:
SURE-LOC ALUMINUM EDGING CORPORATION - HOLLAND MI
TEL: 1-800-787-3562 OR APPROVED EQUAL

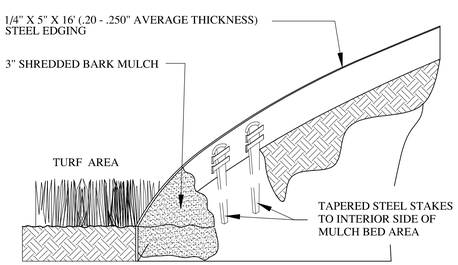

NOTES:

INSTALLATION TO BE COMPLETED IN ACCORDANCE WITH MANUFACTURER'S SPECIFICATIONS.

SEE LANDSCAPE PLAN FOR LOCATION OF LAWN VS. MULCHED BED AREAS AND PLACEMENT OF STEEL EDGING.

CONTRACTOR TO PROVIDE SHOP DRAWING TO LANDSCAPE ARCHITECT FOR APPROVAL PRIOR TO MATERIALS ORDERING AND INSTALLATION.

TURF PLANTING DETAIL

NOT TO SCALE

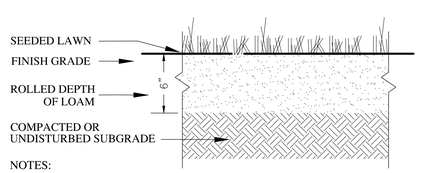

NOTES:

SEED ALL DISTURBED AREAS WITHIN 48 HOURS OF FINAL GRADING. SEED AFTER APRIL 15TH AND BEFORE SEPTEMBER 15TH IN ORDER TO ESTABLISH BEFORE FREEZING TEMPERATURES.

CONTRACTOR IS RESPONSIBLE TO WATER AND ESTABLISH SEEDED LAWN AREAS. WARRANTY SHALL BE 9 WEEKS FOLLOWING INSTALLATION PERIOD.

CONTRACTOR TO INCLUDE NECESSARY TOUCH-UP / RESEEDING FOR ANY AREAS WHERE GRASS SEED DOES NOT GERMINATE DURING THE WARRANTY PERIOD.

TREE PLANTING DETAIL

NOT TO SCALE

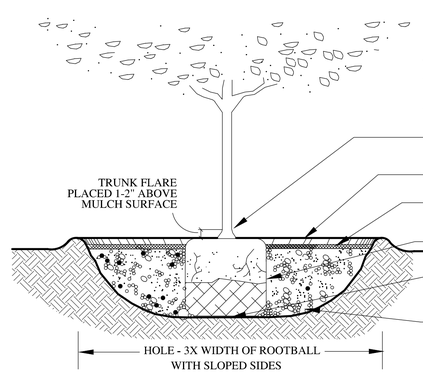

LANDSCAPE CONTRACTOR TO PROVIDE A 2 YEAR GUARANTEE ON ALL TREE AND SHRUB PLANTINGS.

GUARANTEE PERIOD BEGINS FOLLOWING 100% COMPLETION OF THE WORK AND FINAL SIGN-OFF BY THE LANDSCAPE ARCHITECT DURING THE CONSTRUCTION ADMINISTRATION PHASE.

TRUNK FLARE - PLANT 1 - 2" ABOVE BARK MULCH AND ABOVE EXISTING OR FINISHED GRADE

MIN. 6" SAUCER

3" SHREDDED BARK MULCH

REMOVE BURLAP FROM TOP HALF OFF ROOTBALL

ROOTBALL SITS DIRECTLY ON UNDISTURBED SOIL

PLANTING SOIL MIXTURE

NOTE:
REMOVE BURLAP ROPE AND WIRE FROM TOP & SIDES OF ALL BALLS. ADD MULCH AS SHOWN ON PLAN

GROUNDCOVER SPACING DETAIL

NOT TO SCALE

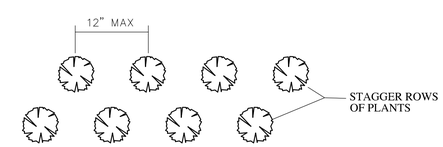

SHRUB PLANTING DETAIL

NOT TO SCALE

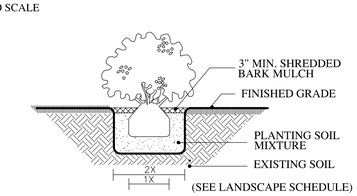

Stamp

Rev. No.	Description	Chkd.

ParkArchitecture.com
3 School House Lane, Suite #1 Elma NH 03750
Tel: 603-543-3400 Mobile: 617-905-0467
Email: parkarchitecture@gmail.com

Client:
SAXON PARTNERS
25 RECREATION PARK DRIVE, SUITE 204
HINGHAM, MA 02043
781-875-3300

Sheet Title: SITE ENLARGEMENT PLAN (3 OF 3)

Project Title: MAREK 2
402 MT SUPPORT ROAD
CITY OF LEBANON, GRAFTON COUNTY, NEW HAMPSHIRE

PA Project #	2315
Checked By:	PS
Drawn By:	PS/KO
Scale:	1"=5'
Date:	09/11/2023

L3.2

LANDSCAPE PLANTING SCHEDULE

QTY	BOTANICAL NAME	COMMON NAME	SIZE
DECIDUOUS TREES			
9	GLEDITSIA TRIACANTHOS V. INERMIS	*IMPERIAL HONEYLOCUST*	2.5" – 3" CALIPER
4	PLATANUS OCCIDENTALIS	*AMERICAN SYCAMORE*	2.5" – 3" CALIPER
10	QUERCUS RUBRA	*RED OAK*	2.5" – 3" CALIPER
5	QUERCUS PALUSTRIS	*PIN OAK*	2.5" – 3" CALIPER
17	ACER RUBRUM 'OCTOBER GLORY'	*OCTOBER GLORY RED MAPLE*	2.5" – 3" CALIPER
27	BETULA PAPYRIFERA	*CLUMP WHITE BIRCH*	CLUMP 8'–10' HT.
20	CERCIS CANADENSIS 'FOREST PANSY'	*FOREST PANSY REDBUD*	2.5" – 3" CALIPER
3	TILIA CORDATA 'GREENSPIRE'	*GREENSPIRE LITTLELEAF LINDEN*	2.5" – 3" CALIPER
12	AMELANCHIER CANADENSIS	*SERVICEBERRY*	5'–6' HT. B&B
EVERGREEN TREES			
6	PICEA GLAUCA	*WHITE SPRUCE*	8'–10' HT. B&B
2	PINUS STROBUS	*EASTERN WHITE PINE*	6'–8' HT. B&B
10	PINUS NIGRA	*AUSTRIAN BLACK PINE*	6'–8' HT. B&B
5	TSUGA CANADENSIS	*EASTERN HEMLOCK*	6'–8' HT. B&B
20	THUJA OCCIDENTALIS	*AMERICAN ARBORVITAE*	6'–8' HT. B&B
SHRUBS			
18	HAMAMELIS VIRGINIANA	*AMERICAN WITCH HAZEL*	30"–36" HT, 7 GAL
11	SYRINGA VULGARIS	*COMMON PURPLE LILAC*	30"–36" HT, 7 GAL
149	ILEX GLABRA 'COMPACTA'	*COMPACT INKBERRY*	24"–30" HT, 5 GAL
95	RHODODENDRON 'PJM ELITE'	*PJM RHODODENDRON*	24"–30" HT, 5 GAL
135	ILEX VERTICILLATA 'WINTER RED'	*WINTER RED WINTERBERRY*	24"–30" HT, 5 GAL
70	CORNUS SERICEA 'BAILEYI'	*BAILEY RED TWIG DOGWOOD*	24"–30" HT, 5 GAL
91	FORSYTHIA X INTERMEDIA	*FORSYTHIA*	24"–30" HT, 5 GAL
9	PINUS MUGO	*MUGO PINE*	18"–24" HT, 7 GAL
26	SPIREA JAP. LITTLE PRINCESS	*LITTLE PRINCESS SPIREA*	18"–24" HT, 7 GAL
8	HYDRANGEA INVINCEBELLE SPIRIT II	*INVINCEBELLE SPIRIT II HYDRANGEA*	18"–24" HT, 7 GAL
19	FOTHERGILLA MAJOR 'MT. AIRY'	*MT AIRY FOTHERGILLA*	18"–24" HT, 7 GAL
7	POTENTILLA FRUITCOSA McKAY'S WHITE	*McKAY'S WHITE POTENTILLA*	18"–24" HT, 7 GAL
10	VIBURNUM NUDUM BRANDYWINE	*BRANDYWINE VIBURNUM*	18"–24" HT, 7 GAL
10	CLETHRA ALNIFOLIA HUMMINGBIRD	*HUMMINGBIRD SWEETSPIRE*	18"–24" HT, 7 GAL
10	TAXUS MEDIA 'DENSIFORMIS'	*DENSE SPREADING YEW*	18"–24" HT, 7 GAL
PERENNIALS & ORNAMENTAL GRASSES			
6+	NEPETA 'SIX HILLS GIANT'	*SIX HILLS GRIANT CATMINT*	2 GAL
8+	RUDBECKIA FULGIDA GOLDSTURM	*GOLDSTURM BLACK EYED SUSAN*	2 GAL
7+	HEMMEROCALLIS STELLA D'ORO	*STELLA D'ORO DAYLILLY*	2 GAL
6+	ANDROPOGON GERARDII 'BLACKHAWKS'	*BLACKHAWKS BIG BLUESTEM*	2 GAL
5+	HELICTOTRICHON SEMPERVIRENS	*BLUE OAT GRASS*	2 GAL

LANDSCAPE NOTES

1. THE NUMBER OF EACH INDIVIDUAL PLANT TYPE AND SIZE IS PROVIDED IN THE PLANT LIST FOR CONTRACTORS CONVENIENCE ONLY. IF A DISCREPANCY EXISTS BETWEEN THE NUMBER OF PLANTS ON THE LIST AND THE NUMBER SHOWN ON THE DRAWING, THE GREATER NUMBER SHALL APPLY.

2. THE CONTRACTOR SHALL SUPPLY PLANT MATERIAL IN QUANTITIES SUFFICIENT TO COMPLETE THE PLANTING AS SHOWN.

3. ALL PLANT MATERIAL SHALL BE APPROVED BY THE LANDSCAPE ARCHITECT OR THE OWNER'S REPRESENTATIVE PRIOR TO ARRIVAL ON SITE.

4. ALL PLANT BEDS WILL BE TOP-DRESSED WITH 3" SHREDDED BARK MULCH.

5. CONTRACTOR SHALL PROVIDE STEEL LANDSCAPE EDGING TO SURROUND ALL MULCH BEDS WHERE INDICATED.

6. THE CONTRACTOR SHALL LOCATE AND MARK ALL UTILITIES PRIOR TO PLANTING. ANY CONFLICTS BETWEEN PLANTING AND UTILITIES SHALL BE IMMEDIATELY REPORTED TO THE OWNER SO THAT ALTERNATIVE PLANTING LOCATIONS CAN BE DETERMINED.

7. NO SUBSTITUTION OF PLANT MATERIALS WILL BE ALLOWED WITHOUT THE PRIOR WRITTEN APPROVAL OF THE OWNER OR LANDSCAPE ARCHITECT.

8. THE CONTRACTOR SHALL BE RESPONSIBLE FOR PROTECTING ALL PLANTS AGAINST DAMAGE FROM ON-GOING CONSTRUCTION. PROTECTION SHALL BEGIN AT THE TIME THE PLANT IS INSTALLED AND CONTINUE UNTIL FORMAL ACCEPTANCE OF ALL PLANTINGS.

9. ALL OTHER DISTURBED AREAS NOT OTHERWISE INDICATED SHALL BE LOAMED AND SEEDED.

10. CONTRACTOR SHALL PRESERVE EXISTING TREES WHERE INDICATED.

11. CONTRACTOR SHALL PROVIDE A 2-YEAR GUARANTEE ON ALL INSTALLED PLANT MATERIAL.

12. ALL PROPOSED TREES SHALL BE PLACED A MINIMUM OF 10FT FROM EXISTING AND PROPOSED UTILITIES.

14. ALL TREES SPECIFIED WILL BE OF GOOD QUALITY AND IN COMPLIANCE WITH THE MOST RECENT EDITION OF ANSI Z60.1 AMERICAN STANDARD FOR NURSERY STOCK PUBLISHED BY AMERICANHORT.

NE WILDFLOWER SEED MIX SPECS

NORTHEAST NATIVE WILDFLOWER SEED MIXTURE PLANTED IN AREAS SHOWN ON LANDSCAPE PLAN

NORTHEAST WILDFLOWER SEED MIXTURE TO CONTAIN A MAJORITY OF > 67% PERENNIAL VARIETIES TO INSURE GROWTH OF WILDFLOWER VEGETATION IN SUCCESSIVE YEARS.

NEWP.COM/SEED-MIXES OR APPROVED EQUAL

SLOPE PLANTING TYPE	QTY	SIZE
Custom Blend of Northeast Native Wildflower Mixture	± 29,000 SF	SEED MIX

NE WILDFLOWER MIXTURE

PROPOSED DECIDUOUS TREES:

IMPERIAL HONEY LOCUST

OCTOBER GLORY RED MAPLE

AMERICAN SYCAMORE

RED OAK TREE

PIN OAK TREE

FOREST PANSY REDBUD

GREENSPIRE LINDEN

SHADBLOW SERVICEBERRY

CLUMP WHITE BIRCH

PROPOSED EVERGREEN TREES:

AUSTRIAN BLACK PINE

WHITE SPRUCE

CANADIAN HEMLOCK

EASTERN WHITE PINE

EVERGREEN SCREEENING

AMERICAN ARBORVITAE

SPREADING YEW

PROPOSED SHRUBS:

WITCH HAZEL

PURPLE LILAC

INKBERRY SHRUB

PJM RHODODENDRON

WINTERBERRY HOLLY

RED TWIG DOGWOOD

FORSYTHIA

MUGO PINE SHRUB

LITTLE PRINCESS SPIREA

HYDRANGEA

FOTHERGILLA

BRANDYWINE VIBURNUM

CLETHRA

PROPOSED PERENNIALS & GRASSES:

CATMINT

BLACK EYED SUSAN

STELLA D'ORO DAYLILLY

BLACKHAWK BIG BLUESTEM

BLUE OAT GRASS

Stamp

Rev. No.	Description	Chkd.

ParkArchitecture.com
3 School House Lane, Suite #1 Elma NH 03750
Tel: 603-543-3400 Mobile: 617-905-0467
Email: parkarchitecture@gmail.com

Client:
SAXON PARTNERS
25 RECREATION PARK DRIVE, SUITE 204
HINGHAM, MA 02043
781-875-3300

Sheet Title: LANDSCAPE DETAILS (1 OF 3)

Project Title: MAREK 2
402 MT SUPPORT ROAD
CITY OF LEBANON, GRAFTON COUNTY, NEW HAMPSHIRE

PA Project #	2315
Checked By:	PS
Drawn By:	PS/KO
Scale:	NTS
Date:	09/11/2023

L4.0

BUILDING DRIP STRIP

SCALE: NTS

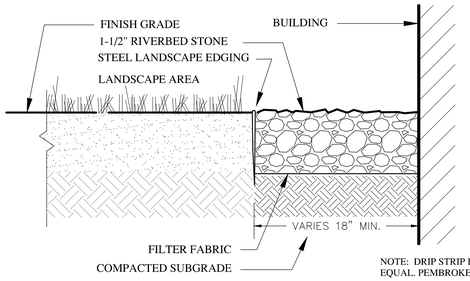

NH RIVERBED 1 ½"

Native NH round stone consisting of multiple colors, mostly blue and grey with a hint of white and pink. This Stone will add a naturally classic touch to any landscape project.

NOTE: DRIP STRIP BY THE DIRT DOCTORS OR APPROVED EQUAL. PEMBROKE, NH (603) 229-3200

STONE DUST SURFACE AT DOG PARK

NOT TO SCALE

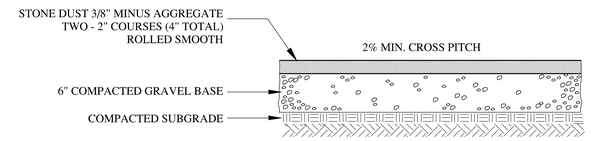

NOTE: SEE PLAN FOR LOCATION OF STONE DUST SURFACING

SHRUB PLANTING DETAIL

NOT TO SCALE

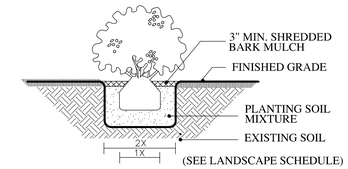

CONCRETE PATIO PAVERS

SCALE: NTS

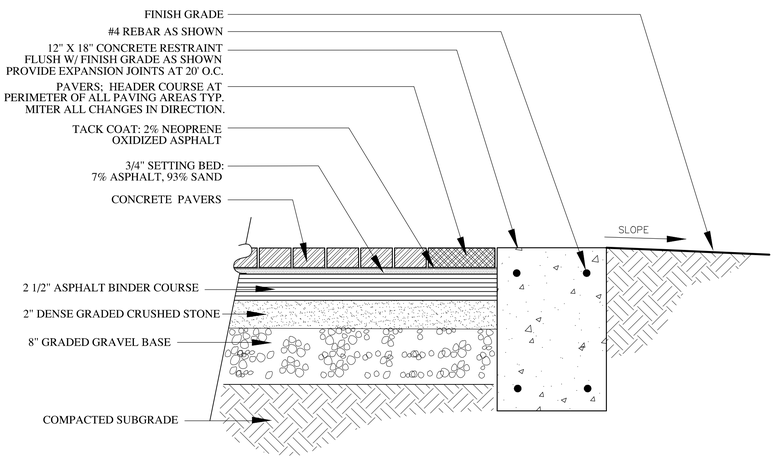

DOG PARK WASTE STATION

NOT TO SCALE

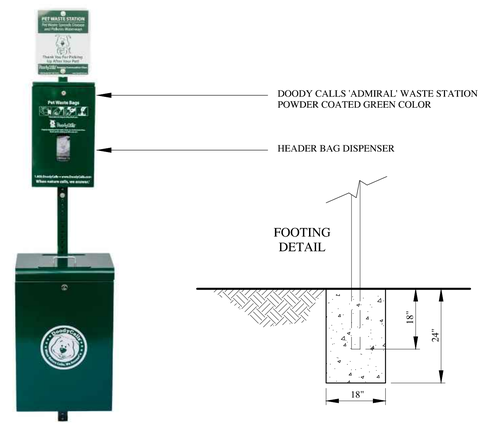

NOTES:

1. ADMIRAL DOG WASTE STATION, OR APPROVED EQUAL.
2. COLOR: GREEN; DISPENSER TYPE: ROLL
3. TO BE INSTALLED PER MANUFACTURER SPECIFICATIONS.
4. SEE PLAN FOR LOCATION OF PROPOSED WASTE STATIONS.

DOG PARK WATER FOUNTAIN

NOT TO SCALE

NOTES:

1. HALSEY TAYLOR 4420DBEVG BI LEVEL OUTDOOR DRINKING FOUNTAIN w/ PET FOUNTAIN, OR APPROVED EQUAL.
2. TO BE INSTALLED PER MANUFACTURER INSTRUCTIONS.

ORNAMENTAL PATIO FENCE DETAIL

NOT TO SCALE

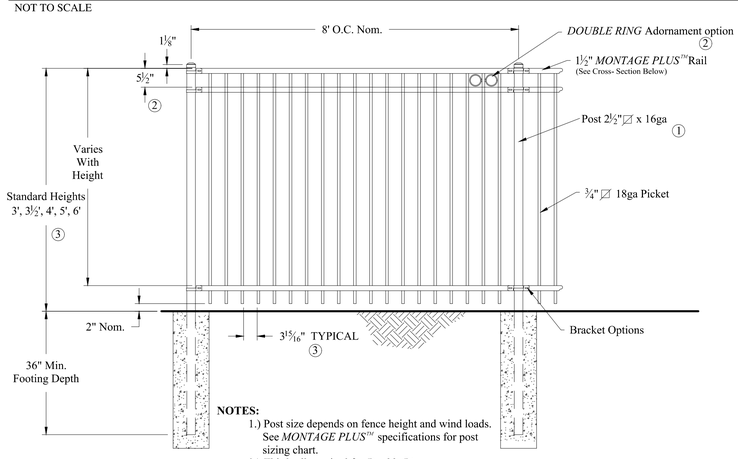

NOTES:

1.) Post size depends on fence height and wind loads. See *MONTAGE PLUS™* specifications for post sizing chart.
2.) Third rail required for *Double Rings*.
3.) Available in 3" air space and/or Flush Bottom on most heights.

ORNAMENTAL DOG PARK FENCE DETAIL

NOT TO SCALE

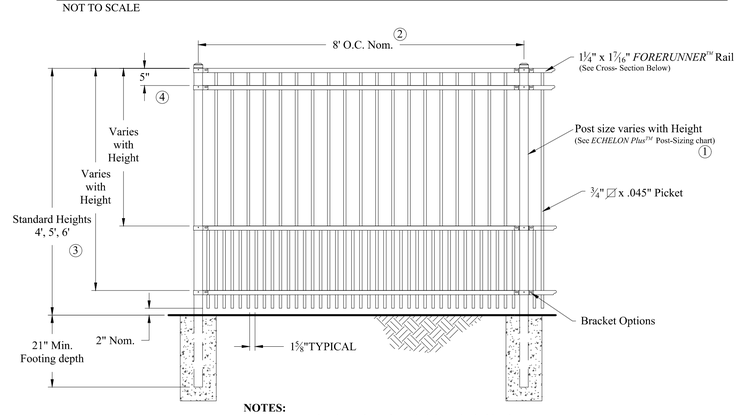

NOTES:

1.) Post size depends on fence height and wind loads. See ECHELON *Plus™* post sizing chart.
2.) Panels also available for 6' on center post spacing
3.) Additional heights available on request
4.) Fourth rail optional. Some heights noted require a fourth rail.

BLACK VINYL CLF INSTALLATION DETAIL

NOT TO SCALE

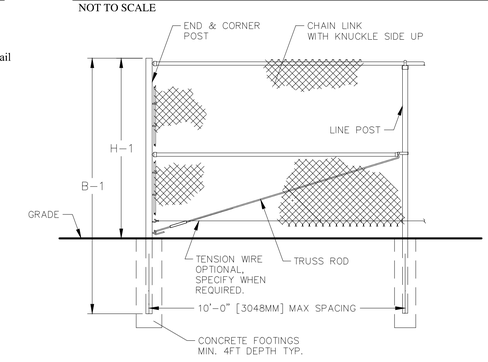

FENCE HEIGHT	END & CORNER POSTS	
NOMINAL HEIGHT	B-1 BAR LENGTH	H-1 HEIGHT ABOVE GRADE
6'-0"	9'-0"	6'-0 5/8"
4'-0"	7'-0"	4'-0 5/8"

SEE LANDSCAPE AND CIVIL PLANS FOR LOCATIONS AND HEIGHT

NOTES:

1. SEE PLAN FOR LOCATION, HEIGHT, AND LENGTH OF PROPOSED FENCING. (BEGIN / END CLF LABELS)
2. ALL CHAIN LINK FABRIC SHALL BE BLACK VINYL COATED.
3. ALL POSTS, BARS, RODS & HARDWARE SHALL BE BLACK POWDER COATED STEEL FENCE.
4. CONTRACTOR SHALL INCLUDE TOP AND BOTTOM RAILS ON ALL FENCING.
5. MANUFACTURER SHALL BE ANCHOR FENCE OR APPROVED EQUAL.
6. INSTALL FABRIC WITH KNUCKLE SIDE UP AND POINTED END DOWN.
7. CONTRACTOR TO PROVIDE SHOP DRAWING TO LANDSCAPE ARCHITECT FOR APPROVAL PRIOR TO ORDERING MATERIALS AND INSTALLATION.

Stamp

Rev. No.	Description	Chkd.

ParkArchitecture.com
3 School House Lane, Suite #1 Elma NH 03750
Tel: 603-543-3400 Mobile: 617-205-0467
Email: parkarchitecture@gmail.com

Client:
SAXON PARTNERS
25 RECREATION PARK DRIVE, SUITE 204
HINGHAM, MA 02043
781-875-3300

Sheet Title: LANDSCAPE DETAILS (2 OF 3)

Project Title: MAREK 2
402 MT SUPPORT ROAD
CITY OF LEBANON, GRAFTON COUNTY, NEW HAMPSHIRE

PA Project #	2315
Checked By:	PS
Drawn By:	PS/KO
Scale:	NTS
Date:	09/11/2023

L4.1

BBQ – GRILL COUNTER

NOT TO SCALE

GENERAL NOTES:

CONTRACTOR SHALL COORDINATE WITH MEP FOR GAS AND ELECTRICAL CONNECTIONS.

PROVIDE SHOP DRAWING FOR APPROVAL PRIOR TO ORDERING MATERIALS AND INSTALLATION. INSTALL AS PER MANUF.

GRILLS SHALL BE PLACED A MINIMUM OF 10FT FROM ANY STRUCTURE AS PER NH 10.10.6.1
SEE PLAN FOR GRILL LOCATIONS.

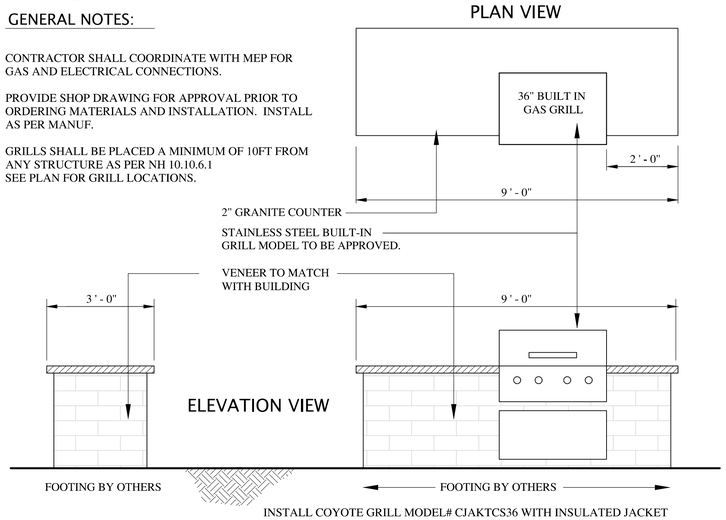

INSTALL COYOTE GRILL MODEL# CJAKTCS36 WITH INSULATED JACKET

Coyote C Series 36" Built In Gas Grill - C2C36

Overall Dimensions: 23" H x 35 ½" W x 25 ½" D
Cutout Dimensions: 10 ¼" H x 32 ½" W x 20 ½" D

Features:

- Premium 304 Stainless Steel Construction
- (4) high-performance Coyote Infinity Burners™
- 875 square inches of cooking area
- Up to 80,000 BTU of output
- LED interior lighting

BIKE RACK INSTALLATION DETAIL

NOT TO SCALE

CONTRACTOR TO SURFACE MOUNT

NOTE:
BIKE RACK SHALL BE STAINLESS STEEL BY DERO / HEAVY DUTY OR APPROVED EQUAL

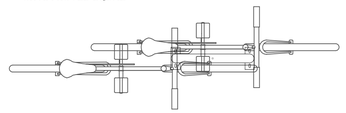

COLOR: STAINLESS STEEL

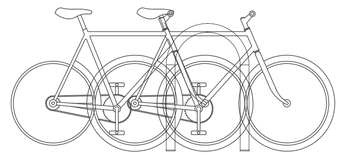

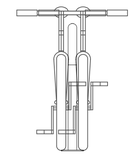

GENERAL NOTES:

PRIOR TO ORDERING OF MATERIALS AND INSTALLATION, CONTRACTOR SHALL PROVIDE SHOP DRAWINGS TO LANDSCAPE ARCHITECT FOR APPROVAL OF ALL SITE FURNISHINGS, EXTERIOR TABLES, SEATING BENCHES AND BIKE RACKS. THIS SHALL INCLUDE FINISHES AND INSTALLATION METHODS.

SEE PLAN L1.1 FOR OUTDOOR BIKE STORAGE REQUIREMENTS.

6FT LONG SEATING BENCH

SCALE: NTS

NOTES:

1. INSTALL MODEL 500-60HS 6FT STEEL BENCH WITH STEEL SEAT. WITH BLACK POWDER COATED FINISH.
2. SEE PLAN FOR LOCATION OF BENCHES
3. MANUFACTURER SHALL BE DUMOR OR APPROVED EQUAL.
4. CONTRACTOR SHALL INSTALL / SECURE BENCH WITH EMBEDED FOOTING AS PER MANUFACTURER SPECIFICATIONS.
5. CONTRACTOR TO PROVIDE SHOP DRAWING TO LANDSCAPE ARCHITECT FOR APPROVAL PRIOR TO ORDERING MATERIALS AND INSTALLATION.

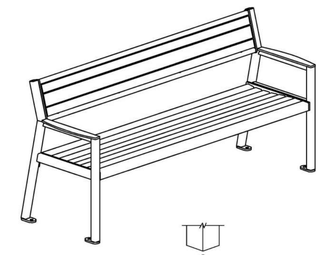

☐ S-5 FREE STANDING

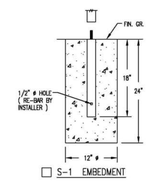

☐ S-1 EMBEDMENT

NOTES:
1.) ALL STL. MEMBERS COATED W/ ZINC RICH EPOXY THEN FINISHED W/ POLYESTER POWDER COATING.
2.) 1/2" X 3 3/4" EXPANSION ANCHOR BOLTS PROVIDED FOR S-2.

42IN BENTO GAS FIRE PIT WITH ELECTRICAL IGNITION

NOT TO SCALE

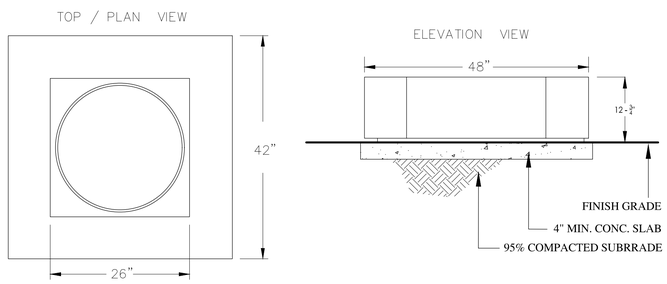

DIMENSIONS & WEIGHT
BENTO 32: 32" X 32" X 12.75"H (813 X 813 X 324H). UP TO 340 LBS (155 KG)
BENTO 42: 42" X 42" X 12.75"H (1067 X 1067 X 324H). UP TO 500 LBS (225 KG)

BURNERS:
ELECTRONIC AND MATCH-LIT IGNITION
NATURAL GAS: 69,000 BTU/H | 25 KW. PROPANE 60,000 BTU/H | 25 KW

ACCESSORIES:
ALL-WEATHER COVER (INCLUDED). POWDER-COATED ALUMINUM TABLE TOP. TEMPERED GLASS SCREEN

NOTES:

COLOR AND FINISH TO BE SELECTED BY OWNER.

PROVIDE CONSTRUCTION DRAWING TO LANDSCAPE ARCHITECT FOR APPROVAL PRIOR TO ORDERING AND INSTALLATION.

BURNING MEDIA SHALL BE LAVA ROCK AND TOP WITH GRAY RIVER ROCK,
FOR MORE INFORMATION VISIT PALOFORM.COM/FIRE-PITS/BENTO

8FT X 12FT SHADE STRUCTURE DETAIL

SCALE: NTS

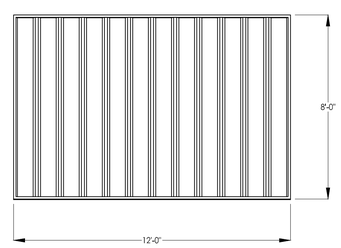

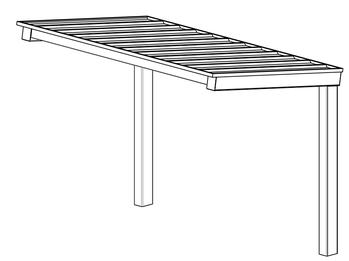

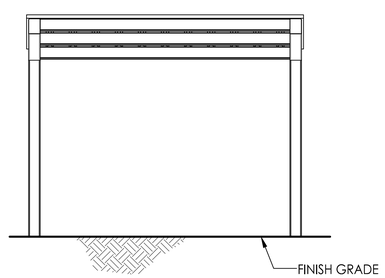

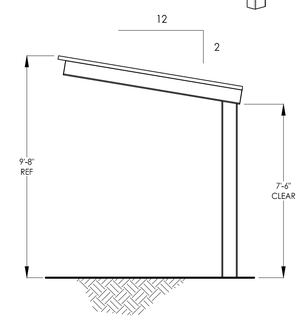

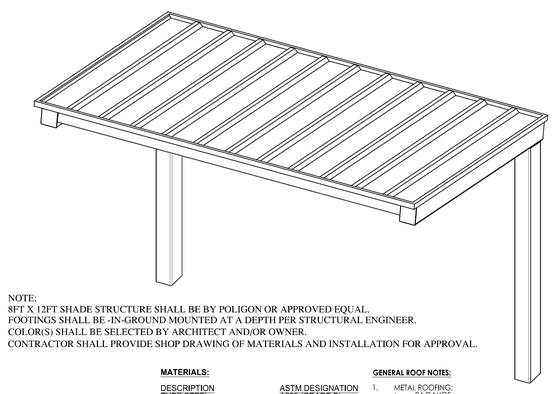

NOTE:
8FT X 12FT SHADE STRUCTURE SHALL BE BY POLIGON OR APPROVED EQUAL.
FOOTINGS SHALL BE -IN-GROUND MOUNTED AT A DEPTH PER STRUCTURAL ENGINEER.
COLOR(S) SHALL BE SELECTED BY ARCHITECT AND/OR OWNER.
CONTRACTOR SHALL PROVIDE SHOP DRAWING OF MATERIALS AND INSTALLATION FOR APPROVAL.

MATERIALS:

DESCRIPTION	ASTM DESIGNATION
TUBE STEEL	A500 (GRADE B)
SCHEDULE PIPE	A53 (GRADE B)
RMT PIPE	A519
LIGHT GAGE COLD FORMED STRUCTURAL STEEL PLATE	A1003 (GRADE 50)
ROOF PANELS (STEEL)	A36
	A653

GENERAL ROOF NOTES:

1. METAL ROOFING:
   - 24 GAUGE
   - GALVALUME COATED
   - KYNAR 500 PAINTED
2. TRIM COLOR MATCHES ROOF
3. SEE POLIGON.COM FOR COLOR OPTIONS

GENERAL NOTES:

UNLESS NOTED OTHERWISE, THIS STRUCTURE WAS DESIGNED TO ONLY SUPPORT WHAT IS SHOWN ON THESE DRAWINGS. POLIGON MUST BE CONTACTED IF ANYTHING ELSE IS TO BE ATTACHED TO THIS STRUCTURE (WALLS, COLUMN WRAPS, RAILINGS, ETC.) SO THE DESIGN OF THIS STRUCTURE CAN BE REVIEWED AND POSSIBLY REVISED.

UNLESS NOTED OTHERWISE, THIS STRUCTURE WAS DESIGNED ASSUMING A 20' SEPARATION BETWEEN ANY ADJACENT STRUCTURE WITH AN EAVE HEIGHT EQUAL TO OR GREATER THAN THE EAVE HEIGHT OF THIS STRUCTURE. IF THAT SEPARATION DOES NOT EXIST, POLIGON MUST BE CONTACTED SO THE DESIGN OF THIS STRUCTURE CAN BE REVIEWED AND POSSIBLY REVISED.

STRUCTURAL STEEL SHALL BE DETAILED, FABRICATED, AND ERECTED IN ACCORDANCE WITH THE LATEST EDITION OF THE AMERICAN INSTITUTE OF STEEL CONSTRUCTION (AISC) SPECIFICATION MANUAL.

ALL WELDING IS PERFORMED BY AMERICAN WELDING SOCIETY CERTIFIED WELDERS AND CONFORMS TO THE LATEST EDITION OF AWS D1.1 OR D1.3 AS REQUIRED.

PARTS SHOWN MAY BE UPGRADED DUE TO STANDARDIZED FABRICATION. REFER TO THE SHIPPING BILL OF MATERIALS FOR POSSIBLE SUBSTITUTIONS.

FOR PROPER FIELD INSTALLATION OF THE BUILDING IT IS RECOMMENDED THAT THE PRIMARY FRAME INSTALLER AND THE ROOF INSTALLER HAVE A MINIMUM FIVE (5) YEARS DOCUMENTED EXPERIENCE INSTALLING THIS TYPE OF PRODUCT.

FOR PROPER FIELD INSTALLATION OF THE BUILDING IT IS RECOMMENDED THAT ELECTRIC WIRING, IF REQUIRED, BE RUN THROUGH THE STRUCTURAL MEMBERS BEFORE THE BUILDING IS ERECTED.

Stamp

Rev. No.	Description	Chkd.

ParkArchitecture.com
3 School House Lane, Suite #1 Elma NH 03750
Tel: 603-543-3400 Mobile: 617-905-0467
Email: parkarchitecture@gmail.com

Client:
SAXON PARTNERS
25 RECREATION PARK DRIVE, SUITE 204
HINGHAM, MA 02043
781-875-3300

Sheet Title: LANDSCAPE DETAILS (3 OF 3)

Project Title: MAREK 2
402 MT SUPPORT ROAD
CITY OF LEBANON, GRAFTON COUNTY, NEW HAMPSHIRE

PA Project #	2315
Checked By:	PS
Drawn By:	PS/KO
Scale:	NTS
Date:	09/11/2023

L4.2

DRAFT

20' 0' 20' 40'

SCALE: 1" = 20FT

NORTH

SITE LIGHTING KEY

SYM	LABEL	DESCRIPTION
	B	PROPOSED LED BOLLARD
	LP1	PROPOSED LIGHT POST
	LP2	PROPOSED LIGHT POST
	LP3	PROPOSED LIGHT POST
	P2	PROPOSED PEDESTRIAN LIGHT
	P2-HS	PROPOSED PEDESTRIAN LIGHT (WITH SHIELD)
	SP1	SPORT POLE LIGHTING
	2SP1	SPORT POLE LIGHTING (DOUBLE)
	ELT-1	BUILDING SCONCE LIGHTING (AT 7'-2" HT)
	X-1	CROSS-WALK LIGHTING (OFF SITE WITHIN ROW)
RB		3FT HIGH RAISED BASE (SEE DETAIL)
GB		AT GRADE BASE (SEE DETAIL)

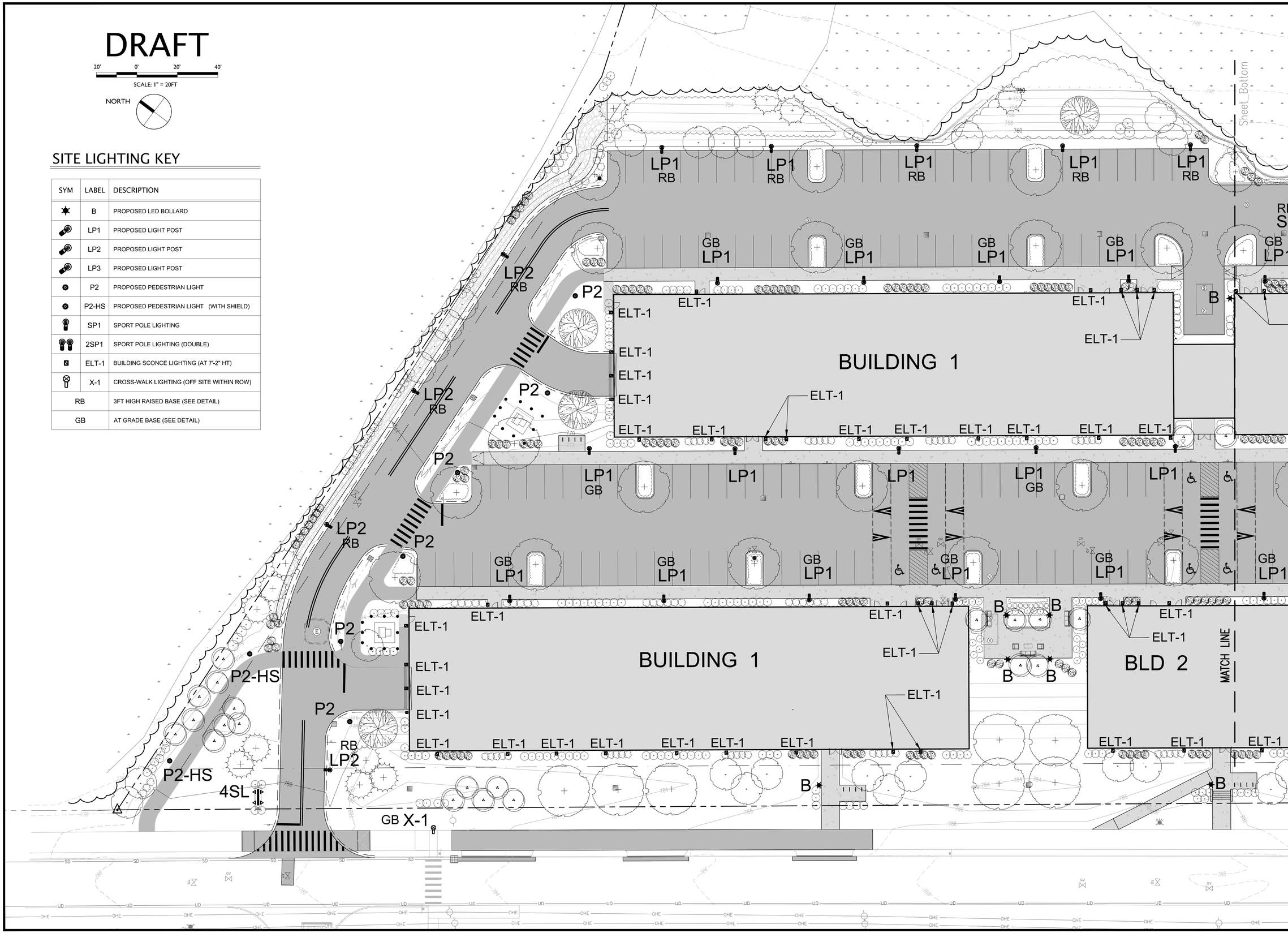

Stamp

Rev. No.	Description	Chkd.

ParkArchitecture.com
3 School House Lane, Suite #1 Elma NH 03750
Tel: 603-643-3400 Mobile: 617-905-0467
Email: parkarchitecture@gmail.com

Client:
SAXON PARTNERS
25 RECREATION PARK DRIVE, SUITE 204
HINGHAM, MA 02043
781-875-3300

Sheet Title: SITE LIGHTING PLAN (1 OF 2)

Project Title: MAREK 2
402 MT SUPPORT ROAD
CITY OF LEBANON, GRAFTON COUNTY, NEW HAMPSHIRE

PA Project #	2315
Checked By:	PS
Drawn By:	PS
Scale:	NTS
Date:	10/04/2023

L5.0

DRAFT

20' 0' 20' 40'

SCALE: 1" = 20FT

NORTH

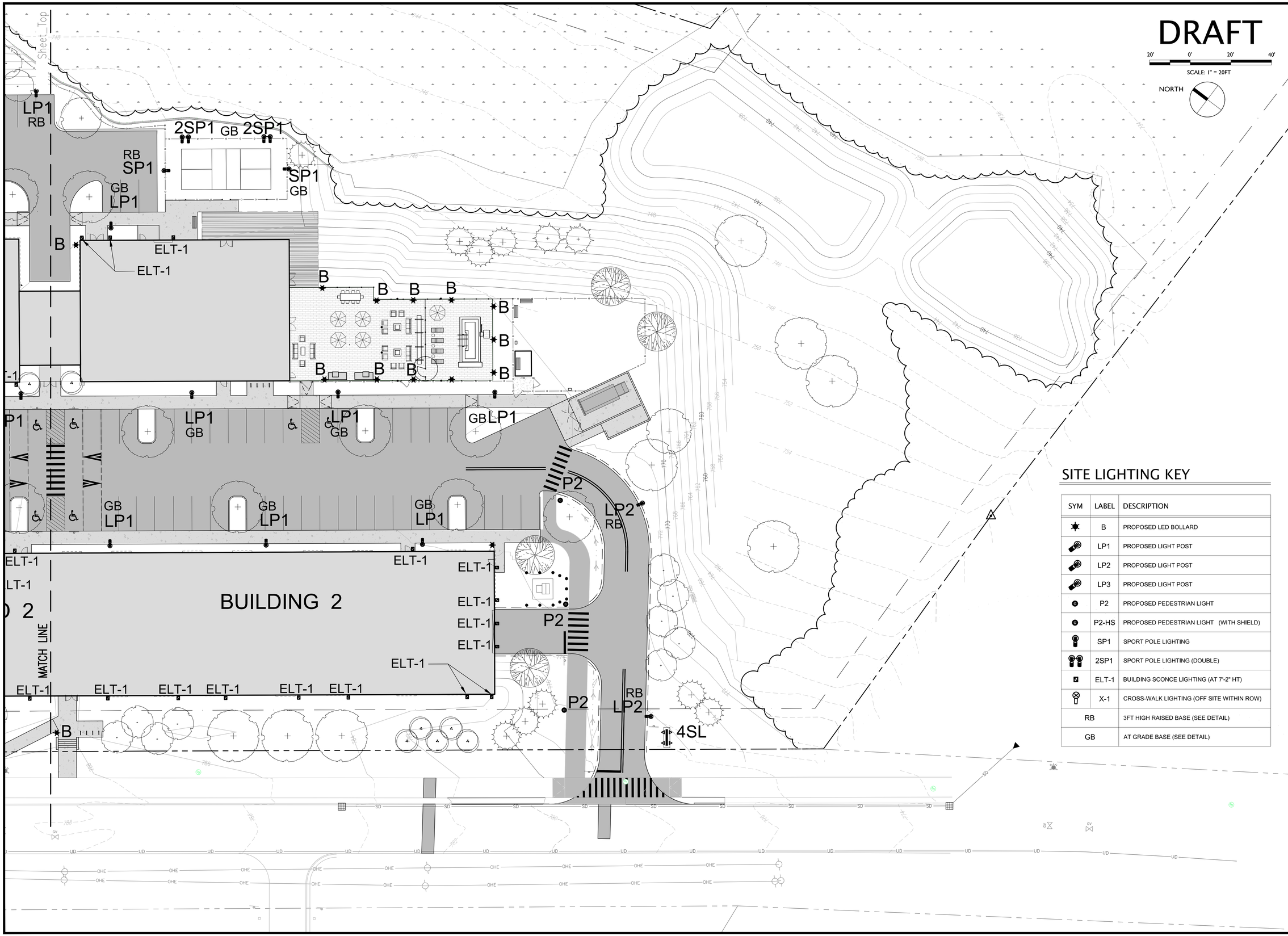

SITE LIGHTING KEY

SYM	LABEL	DESCRIPTION
	B	PROPOSED LED BOLLARD
	LP1	PROPOSED LIGHT POST
	LP2	PROPOSED LIGHT POST
	LP3	PROPOSED LIGHT POST
	P2	PROPOSED PEDESTRIAN LIGHT
	P2-HS	PROPOSED PEDESTRIAN LIGHT (WITH SHIELD)
	SP1	SPORT POLE LIGHTING
	2SP1	SPORT POLE LIGHTING (DOUBLE)
	ELT-1	BUILDING SCONCE LIGHTING (AT 7'-2" HT)
	X-1	CROSS-WALK LIGHTING (OFF SITE WITHIN ROW)
RB		3FT HIGH RAISED BASE (SEE DETAIL)
GB		AT GRADE BASE (SEE DETAIL)

Stamp

Rev. No.	Description	Chkd.

ParkArchitecture.com
3 School House Lane, Suite #1 Elma NH 03750
Tel: 603-543-3400 Mobile: 617-905-0467
Email: parkarchitecture@gmail.com

Client:
SAXON PARTNERS
25 RECREATION PARK DRIVE, SUITE 204
HINGHAM, MA 02043
781-875-3300

Sheet Title:
SITE LIGHTING PLAN (2 OF 2)

Project Title:
MAREK 2
402 MT SUPPORT ROAD
CITY OF LEBANON, GRAFTON COUNTY, NEW HAMPSHIRE

PA Project #	2315
Checked By:	PS
Drawn By:	PS
Scale:	NTS
Date:	10/04/2023

L5.1

SITE LIGHTING REQUIREMENTS / REGULATIONS

6.7B. GENERAL REQUIREMENTS

ALL LIGHT FIXTURES, INCLUDING FIXTURES MOUNTED INSIDE BUILDINGS OR STRUCTURS, SHALL BE LOCATED, MOUNTED, AIMED, AND SHIELDED SO AS TO MINIMIZE GLARE PERCEPTIBLE TO DRIVERS, PEDESTRIANS, BICYCLISTS, AND OTHER PASSERSBY WITHIN ADJACENT STREETS OR RIGHTS-OF-WAY. IN ADDITION TO THESE GENERAL STANDARDS, THE FOLLOWING SHALL ALSO APPLY:

1. LIGHTING INSTALLATIONS SHALL BE DESIGNED TO PROVIDE THE MINIMUM ILLUMINATION NECESSARY TO FACILITATE THE USE OF THE SITE. EXCEPT AS OTHERWISE STATED IN SPECIAL PROVISIONS OF THIS SECTION OR UNLESS APPROVED BY THE BOARD, LIGHTING LEVELS SHALL NOT EXCEED THE MINIMUM LEVEL OF ILLUMINATION RECOMMENDED BY THE IESNA FOR THE PROPOSED USE AND LEVEL OF ACTIVITY.

2. LIGHT FIXTURES SHALL BE LOCATED, MOUNTED, AIMED, AND SHIELDED SO AS TO NOT CAUSE LIGHT TRESPASS UPON ADJACENT PROPERTIES OR ONTO STREETS OR RIGHTS-OF-WAY IN EXCESS OF THE FOLLOWING LEVELS: THE LIGHT INTENSITY AT ADJOINING STREETS OR COMMERCIAL PROPERTY BOUNDARIES SHALL NOT EXCEED 0.5 FOOT-CANDLES AT GRADE LEVEL AND THE LIGHT INTENSITY AT ADJOINING RESIDENTIAL PROPERTY BOUNDARIES SHALL NOT EXCEED 0.1 FOOT-CANDLES AT GRADE LEVEL.

3. LIGHTING INSTALLATIONS SHALL UTILIZE FULLY-SHIELDED FIXTURES, AS DEFINED HEREIN, OR FULL CUT-OFF FIXTURES, AS DEFINED BY THE IESNA, SO AS TO PRODUCE NO LIGHT ABOVE A HORIZONTAL PLANE THROUGH THE LOWEST DIRECT LIGHT-EMITTING PART OF THE FIXTURE.

4. LIGHTING INSTALLATIONS SHALL INCLUDE TIMERS, DIMMERS, SENSORS, AND/OR OTHER ENERGY-SAVING TECHNOLOGIES TO REDUCE OVERALL ENERGY CONSUMPTION.

5. THE MAXIMUM MOUNTING HEIGHT OF THE LIGHT FIXTURE SHALL NOT EXCEED FIFTEEN (15) FEET IN RESIDENTIAL ZONING DISTRICTS OR TWENTY (20) FEET IN COMMERCIAL, INSTITUTIONAL, OR MIXED ZONING DISTRICTS.

6. LIGHTING INSTALLATIONS USED TO ILLUMINATE AREAS SUCH AS STREETS, WALKWAYS, OR PARKING LOTS SHALL UTILIZE ENERGY-EFFICIENT LIGHTING SUCH AS LED (LIGHT-EMITTING DIODE

6.7.C. LIGHTING OF PARKING LOTS

1. AREAS DESIGNATED AS PARKING LOTS, PASSIVE VEHICULAR STORAGE AREAS, OR EXTERIOR DISPLAY/SALES AREAS SHALL BE ILLUMINATED SO THAT THE AVERAGE HORIZONTAL ILLUMINANCE AT GRADE LEVEL IS NO MORE THN 5.0 FOOT-CANDLES. THE UNIFORMITY RATIO (RATIO OF AVERAGE TO MINIMUM ILLUMINANCE) SHALL BE NO GREATER THAN 4:1. THE AVERAGE AND MINIMUM SHALL BE COMPUTED FOR ONLY THAT AREA DESIGNATED AS PARKING LOTS, PASSIVE VEHICULAR STORAGE AREAS, ANDEXTERIOR DISPLAY / SALES AREAS.

6.7.F. LIGHTING OF WALKWAYS / BIKEWAYS AND PARKS

1. AREAS WITHIN PARKS OR ALONG WALKWAYS AND BIKEWAYS TO BE ILLUMINATED SHALL NOT EXCEED AN AVERAGE LEVEL OF 1.0 FOOT-CANDLE AT GRADE LEVEL.

2. LIGHT FIXTURES FOR WALKWAYS AND BIKEWAYS AND WITHIN PARKS SHALL BE MOUNTED NO MORE THAN 15 FEET ABOVE GRADE AND SHALL BE DESIGNED TO DIRECT LIGHT DOWNWARD.

PROPOSED LIGHTING REQUIREMENTS

LIGHTING AREA / DESCRIPTION	REQUIRED	PROVIDED	
DESIGNATED PARKING LOT AREA	NTE 5.0 FC AVERAGE	1.5 FC AVERAGE	
P2 & P2-HS 12FT HIGH PEDESTRIAN LIGHTING ALONG WALKWAYS	NTE 1.0 FC AVERAGE	1.0 FC AVERAGE	
LIGHT INTENSITY AT ADJOINING STREETS	NTE 0.5 FC	0.5 FC MAXIMUM	
LIGHT INTENSITY AT ADJOINING RESIDENTIAL BOUNDARIES	NTE 0.1 FC	> 0.3 FC AS SHOWN	* WAIVER REQUESTED

Statistics

Description	Symbol	Avg	Max	Min	Max/Min	Avg/Min
Outside of Parking Lot	+	0.4 fc	25.5 fc	0.0 fc	N/A	N/A
Parking Lot	+	1.5 fc	11.5 fc	0.3 fc	38.3:1	5.0:1
Path Sample	+	1.0 fc	1.7 fc	0.4 fc	4.3:1	2.8:1
Pickle Ball Court	+	21 fc	25 fc	17 fc	1.5:1	1.2:1

Schedule

Symbol	Label	QTY	Manufacturer	Catalog Number	Description	Lamp	Filename	Lumens per Lamp	LLF	Wattage	Distribution	Polar Plot
	2SP1	2	Lithonia Lighting	DSX0 LED P7 30K 80CRI TFTM MVOLT SPA FAO DDBXD with SSS 15 4C DMXXAS DDBXD	D-Series Size 0 Area Fixture Type Forward Throw; mounted at 15ft	LED	DSX0_LED_P7_30K_80CRI_TFTM.ies	18088	0.9	341.62	TYPE IV, SHORT, BUG RATING: B2 - U0 - G5	Max: 10290cd
	B	19	Lithonia Lighting	RADB LED P4 30K SYM MVOLT BTT BCC H36 DDBXD	RADB LED Bollard; mounted at 3ft	LED	RADB_LED_P4_30K_SYM_DDBXD.ies	1335	0.9	18.59	TYPE VS, BUG RATING: B1 - U1 - G0	Max: 1119cd
	LP1	29	Lithonia Lighting	DSX0 LED P2 30K 80CRI BLC3 MVOLT SPA DDBXD with SSS 15 4C DM19AS DDBXD	D-Series Size 0 Area Fixture with Extreme Backlight Control; mounted at 15ft	LED	DSX0_LED_P2_30K_80CRI_BLC3.ies	3916	0.9	45.14	TYPE III, SHORT, BUG RATING: B0 - U0 - G2	Max: 4721cd
	LP2	3	Lithonia Lighting	DSX0 LED P2 30K 80CRI T3M MVOLT SPA DDBXD with SSS 15 4C DM19AS DDBXD	D-Series Size 0 Area Fixture Type 3; mounted at 15ft	LED	DSX0_LED_P2_30K_80CRI_T3M.ies	5383	0.9	45.14	TYPE IV, MEDIUM, BUG RATING: B1 - U0 - G2	Max: 4506cd
	P2	9	Lithonia Lighting	RADPT P1 30K PATH MVOLT PT4 DDBXD with RSS 10 4B PT DDBXD	RADEAN Post-Top Fixture; mounted at 12ft	LED	RADPT_P1_30K_PATH.ies	2473	0.9	25.41	TYPE III, SHORT, BUG RATING: B4 - U2 - G4	Max: 1052cd
	P2-HS	2	Lithonia Lighting	RADPT P1 30K PATH MVOLT HS PT4 DDBXD with RSS 10 4B PT DDBXD	RADEAN Post-Top Fixture with houseside shield; mounted at 12ft	LED	RADPT_P1_30K_PATH_HS.ies	2270	0.9	25.4134	TYPE IV, SHORT, BUG RATING: B1 - U2 - G2	Max: 1034cd
	SP1	2	Lithonia Lighting	DSX0 LED P7 30K 80CRI TFTM MVOLT SPA FAO DDBXD with SSS 15 4C DM19AS DDBXD	D-Series Size 0 Area Fixture Type Forward Throw; mounted at 15ft	LED	DSX0_LED_P7_30K_80CRI_TFTM.ies	18088	0.9	170.81	TYPE IV, SHORT, BUG RATING: B2 - U0 - G5	Max: 10290cd

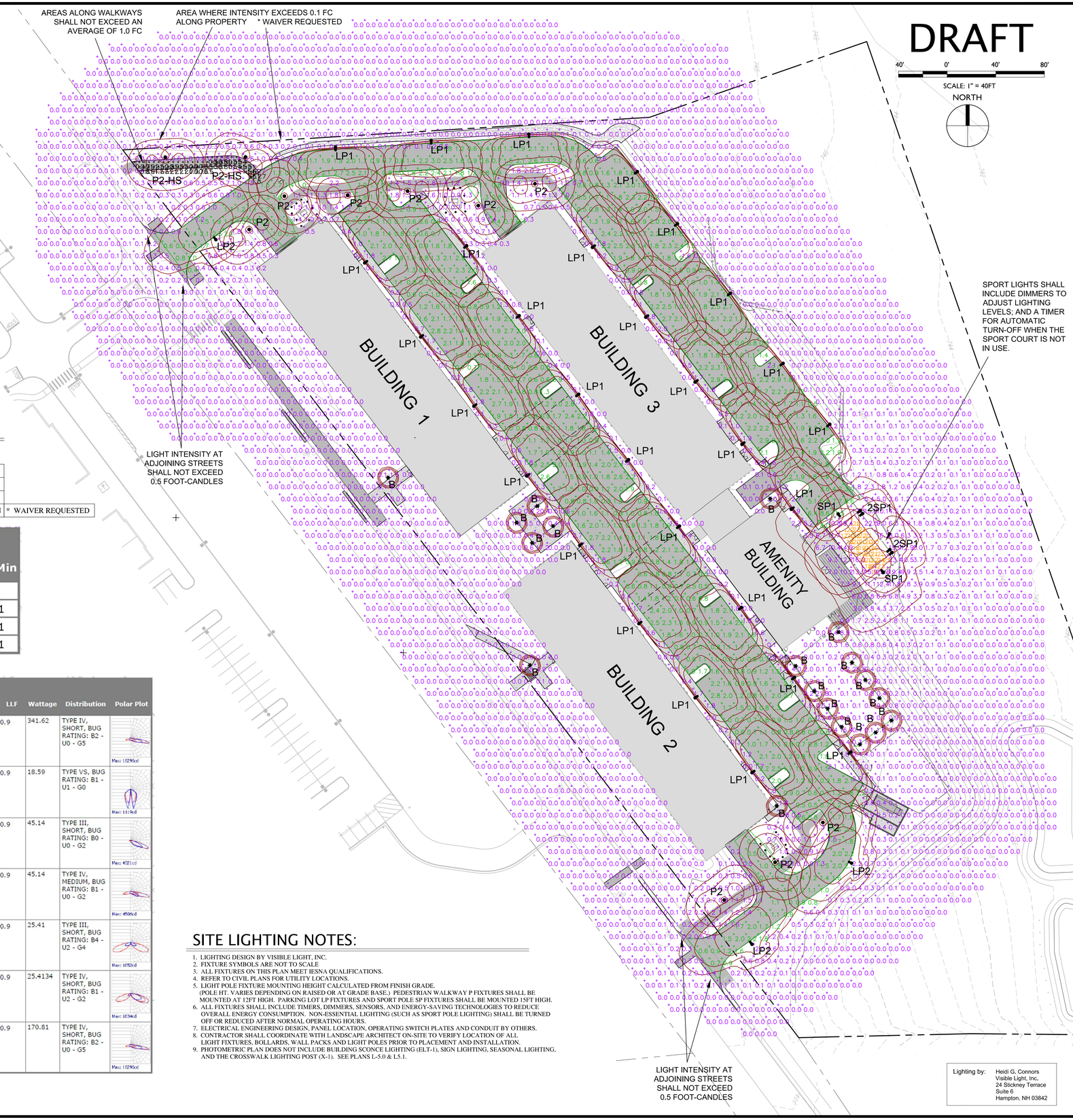

SITE LIGHTING NOTES:

1. LIGHTING DESIGN BY VISIBLE LIGHT, INC.
2. FIXTURE SYMBOLS ARE NOT TO SCALE
3. ALL FIXTURES ON THIS PLAN MEET IESNA QUALIFICATIONS.
4. REFER TO CIVIL PLANS FOR UTILITY LOCATIONS.
5. LIGHT POLE FIXTURE MOUNTING HEIGHT CALCULATED FROM FINISH GRADE. (POLE HT. VARIES DEPENDING ON RAISED OR AT GRADE BASE.) PEDESTRIAN WALKWAY P FIXTURES SHALL BE MOUNTED AT 12FT HIGH. PARKING LOT LP FIXTURES AND SPORT POLE SP FIXTURES SHALL BE MOUNTED 15FT HIGH.
6. ALL FIXTURES SHALL INCLUDE TIMERS, DIMMERS, SENSORS, AND ENERGY-SAVING TECHNOLOGIES TO REDUCE OVERALL ENERGY CONSUMPTION. NON-ESSENTIAL LIGHTING (SUCH AS SPORT POLE LIGHTING) SHALL BE TURNED OFF OR REDUCED AFTER NORMAL OPERATING HOURS.
7. ELECTRICAL ENGINEERING DESIGN, PANEL LOCATION, OPERATING SWITCH PLATES AND CONDUIT BY OTHERS.
8. CONTRACTOR SHALL COORDINATE WITH LANDSCAPE ARCHITECT ON-SITE TO VERIFY LOCATION OF ALL LIGHT FIXTURES, BOLLARDS, WALL PACKS AND LIGHT POLES PRIOR TO PLACEMENT AND INSTALLATION.
9. PHOTOMETRIC PLAN DOES NOT INCLUDE BUILDING SCONCE LIGHTING (ELT-1), SIGN LIGHTING, SEASONAL LIGHTING, AND THE CROSSWALK LIGHTING POST (X-1). SEE PLANS L-5.0 & L5.1.

Lighting by: Heidi G. Connors
Visible Light, Inc.
24 Stickney Terrace
Suite 6
Hampton, NH 03842

Stamp

Rev. No.	Description	Chkd.

ParkArchitecture.com
3 School House Lane, Suite #1 Elma NH 03750
Tel: 603-543-3400 Mobile: 617-905-9467
Email: parkarchitecture@gmail.com

Client:
SAXON PARTNERS
25 RECREATION PARK DRIVE, SUITE 204
HINGHAM, MA 02043
781-875-3300

Sheet Title: SITE LIGHTING PHOTOMETRIC PLAN

Project Title: MAREK 2
402 MT SUPPORT ROAD
CITY OF LEBANON, GRAFTON COUNTY, NEW HAMPSHIRE

PA Project #	2315
Checked By:	PS
Drawn By:	PS
Scale:	1"=40'
Date:	10/04/2023

L5.2

(B) BOLLARD LIGHTING SPECIFICATION

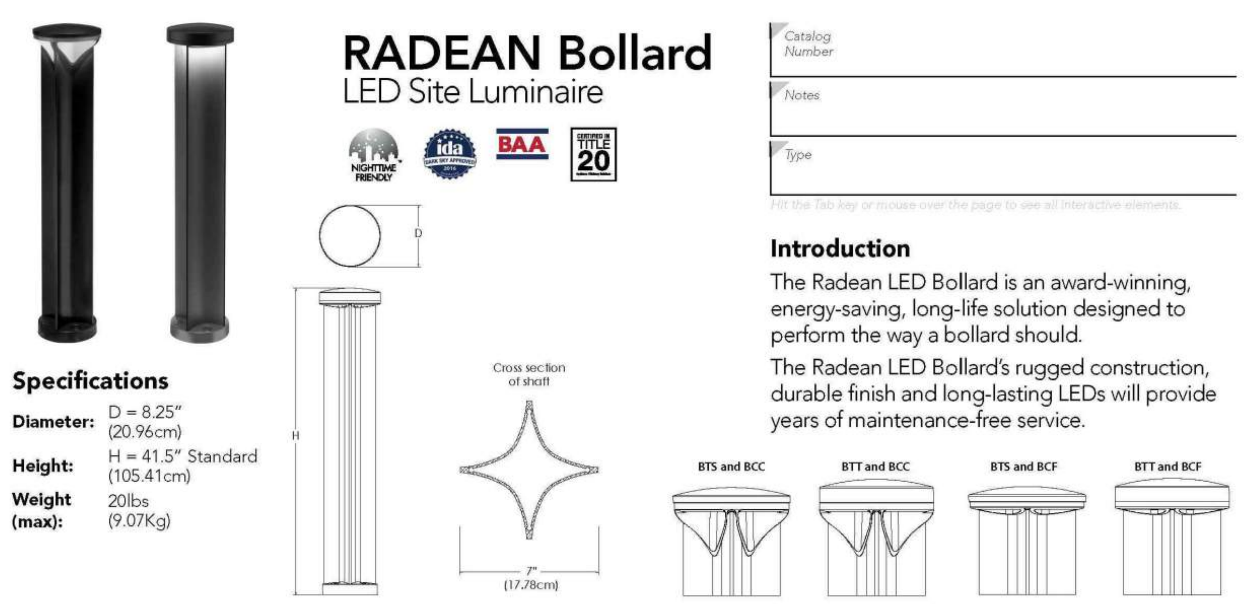

RADEAN Bollard
LED Site Luminaire

Catalog Number

Notes

Type

Hit the Tab key or mouse over the page to see all interactive elements.

Introduction

The Radean LED Bollard is an award-winning, energy-saving, long-life solution designed to perform the way a bollard should.

The Radean LED Bollard's rugged construction, durable finish and long-lasting LEDs will provide years of maintenance-free service.

Specifications

Diameter:	D = 8.25" (20.96cm)
Height:	H = 41.5" Standard (105.41cm)
Weight (max):	20lbs (9.07Kg)

Ordering Information — **EXAMPLE:** RADB LED P4 30K SYM MVOLT BTS BCCDNATXD DBLXD

RADB LED

Series	Performance Package	Color temperature	Distribution	Voltage	Control options	Bollard top (required)
RADB LED	P1 P2 P3 P4 P5[1]	27K 2700K 30K 3000K 35K 3500K 40K 4000K 50K 5000K	ASY Asymmetric[2] SYM Symmetric[1]	MVOLT[3] 120 208[3] 240[3] 277 347 480	**Shipped installed** PE Photoelectric cell, button type[4,5] DMG 0-10V dimming driver (no controls) E7WH Emergency battery backup, Certified in CA Title 20 MAEDBS[1,6,7,8] FAO Field adjustable output[5] PIR Motion sensor Bi-level[3,5,6,7]	**Slim Top** BTS Slim top, painted to match shaft[5,9] BTSDWHXD Slim top, white[5,9] BTSDBLBXD Slim top, black texture[5,9] BTSDBLXD Slim top, black[5,9] BTSDDBTXD Slim top, dark bronze textured[5,9] BTSDDBXD Slim top, dark bronze[5,9] BTSDNATXD Slim top, natural aluminum textured[5,9] BTSDNAXD Slim top, natural aluminum[5,9] BTSDWHGXD Slim top, white textured[9] **Tall Top** BTT Tall top painted to match shaft[9] BTTDBLBXD Tall top, black textured[9] BTTDBLXD Tall top, black[9] BTTDDBTXD Tall top, dark bronze textured[9] BTTDDBXD Tall top, dark bronze[9] BTTDNATXD Tall top, natural aluminum textured[9] BTTDNAXD Tall top, natural aluminum BTTDWHGXD Tall top, white textured[9] BTTDWHXD Tall top, white[9]

Bollard crown (required)		Other options	Finish (required)
Deep Crown BCC Deep crown, painted to match shaft[9] BCCDWHXD Deep crown, white[9] BCCDBLXD Deep crown, black[9] BCCDBLBXD Deep crown, black textured[9] BCCDDBTXD Deep crown, dark bronze textured[9] BCCDDBXD Deep crown, dark bronze[9] BCCDNATXD Deep crown, natural aluminum textured[9] BCCDNAXD Deep crown, natural aluminum[9] BCCDWHGXD Deep crown, white textured[9]	**Flat Crown** BCF Flat crown, painted to match shaft[9] BCFDBLBXD Flat crown, black textured[9] BCFDBLXD Flat crown, black[9] BCFDDBTXD Flat crown, dark bronze textured[9] BCFDDBXD Flat crown, dark bronze[9] BCFDNATXD Flat crown, natural aluminum textured[9] BCFDNAXD Flat crown, natural aluminum[9] BCFDWHGXD Flat crown, white textured[9] BCFDWHXD Flat crown, white[9]	H24[6,10] 24" overall height H30[6,10] 30" overall height H36[6,10] 36" overall height L/AB Without anchor bolts	DDBXD Dark bronze DBLXD Black DNAXD Natural aluminum DWHXD White DDBTXD Textured dark bronze DBLBXD Textured black DNATXD Textured natural aluminum DWHGXD Textured white

Accessories
Ordered and shipped separately.

RADBAB U	Anchor bolts (4)	RK1RADB BCKIT (FINISH) U	Base cover with bolt caps
RADBABC DDBXD U	Replacement anchor bolt covers (specify finish) (4)	RK1RADB EMTESTMAG U	Emergency test stylus

NOTES
1 P5 only available in SYM distribution.
2 ASY has only two illuminated quadrants driven at higher drive currents to generate similar output as the SYM-4-quadrant product.
3 PIR not available with 208V or 240V.
4 PE only available with ASY.
5 PE, PIR and FAO not available with BTS.
6 E7WH and PIR only available in full height. Not available with H24, H30 or H36.
7 PIR not available with E7WH.
8 E7WH is not available with 347V or 480V.
9 Architectural and custom colors available (additional leadtimes and cost may apply).
10 42" Height is standard. H24, H30 and H36 have longer leadtimes.

LITHONIA LIGHTING. COMMERCIAL OUTDOOR One Lithonia Way • Conyers, Georgia 30012 • Phone: 1-800-705-SERV (7378) • www.lithonia.com RADB-LED Rev. 10/25/22
© 2012-2022 Acuity Brands Lighting, Inc. All rights reserved.

(LP) SERIES LIGHT POST SPECIFICATION

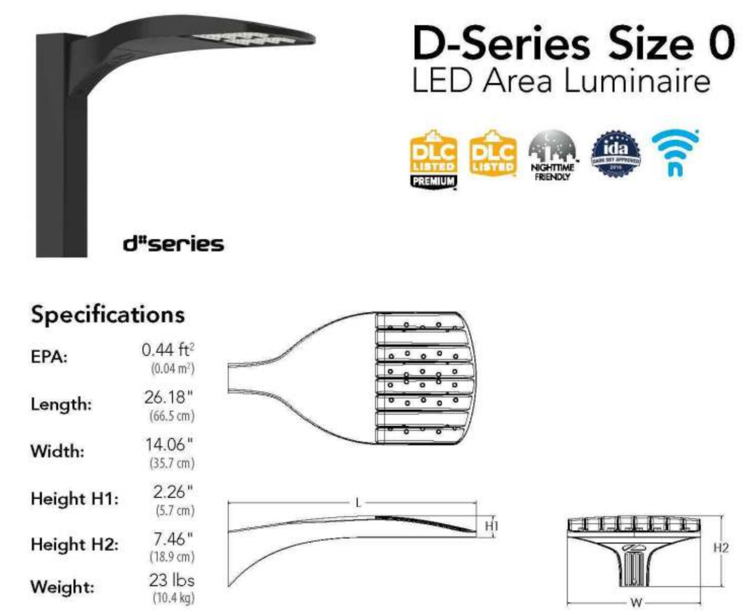

D-Series Size 0
LED Area Luminaire

Catalog Number

Notes

Type

Hit the Tab key or mouse over the page to see all interactive elements.

Introduction

The modern styling of the D-Series features a highly refined aesthetic that blends seamlessly with its environment. The D-Series offers the benefits of the latest in LED technology into a high performance, high efficacy, long-life luminaire.

The photometric performance results in sites with excellent uniformity, greater pole spacing and lower power density. D-Series outstanding photometry aids in reducing the number of poles required in area lighting applications, with typical energy savings of 70% and expected service life of over 100,000 hours.

Specifications

EPA:	0.44 ft² (0.04 m²)
Length:	26.18" (66.5 cm)
Width:	14.06" (35.7 cm)
Height H1:	2.26" (5.7 cm)
Height H2:	7.46" (18.9 cm)
Weight:	23 lbs (10.4 kg)

Ordering Information — **EXAMPLE:** DSX0 LED P6 40K 70CRI T3M MVOLT SPA NLTAIR2 PIRHN DDBXD

DSX0 LED

Series	LEDs	Color temperature[2]	Color Rendering Index[2]	Distribution	Voltage	Mounting
DSX0 LED	**Forward optics** P1 P5 P2 P6 P3 P7 P4 **Rotated optics** P10[1] P12[1] P11[1] P13[1]	(this section 70CRI only) 30K 3000K 40K 4000K 50K 5000K (this section 80CRI only, extended lead times apply) 27K 2700K 30K 3000K 35K 3500K 40K 4000K 50K 5000K	 70CRI 70CRI 70CRI 80CRI 80CRI 80CRI 80CRI 80CRI	AFR Automotive front row T1S Type I short T2M Type II medium T3M Type III medium T3LG Type III low glare[3] T4M Type IV medium T4LG Type IV low glare[3] TFTM Forward throw medium T5M Type V medium T5LG Type V low glare T5W Type V wide BLC3 Type III backlight control[3] BLC4 Type IV backlight control[3] LCCO Left corner cutoff[3] RCCO Right corner cutoff[3]	MVOLT (120V-277V)[4] HVOLT (347V-480V)[5,6] XVOLT (277V-480V)[7,8]	**Shipped included** SPA Square pole mounting (#8 drilling, 3.5" min. SQ pole) RPA Round pole mounting (#8 drilling, 3" min. RND pole) SPA5 Square pole mounting (#5 drilling, 3" min. SQ pole)[9] RPA5 Round pole mounting (#5 drilling, 3" min. RND pole)[9] SPA8N Square narrow pole mounting (#8 drilling, 3" min. SQ pole) WBA Wall bracket[10] MA Mast arm adapter (mounts on 2 3/8" OD horizontal tenon)

Control options		Other options	Finish (required)
Shipped installed NLTAIR2 PIRHN nLight AIR gen 2 enabled with bi-level motion / ambient sensor, 8-40' mounting height, ambient sensor enabled at 2fc.[11,12,18,19] PIR High/low, motion/ambient sensor, 8-40' mounting height, ambient sensor enabled at 2fc[13,18,19] PER NEMA twist-lock receptacle only (controls ordered separate)[14] PER5 Five-pin receptacle only (controls ordered separate)[14,19]	PER7 Seven-pin receptacle only (controls ordered separate)[14,19] FAO Field adjustable output[15,19] BL30 Bi-level switched dimming, 30%[16,19] BL50 Bi-level switched dimming, 50%[16,19] DMG 0-10v dimming wires pulled outside fixture (for use with an external control, ordered separately)[17]	**Shipped installed** HS Houseside shield (black finish standard)[20] L90 Left rotated optics[1] R90 Right rotated optics[1] CCE Coastal Construction[21] HA 50°C ambient operation[22] **Shipped separately** EGSR External Glare Shield (reversible, field install required, matches housing finish) BSDB Bird Spikes (field install required)	DDBXD Dark Bronze DBLXD Black DNAXD Natural Aluminum DWHXD White DDBTXD Textured dark bronze DBLBXD Textured black DNATXD Textured natural aluminum DWHGXD Textured white

LITHONIA LIGHTING. COMMERCIAL OUTDOOR One Lithonia Way • Conyers, Georgia 30012 • Phone: 1-800-705-SERV (7378) • www.lithonia.com DSX0-LED Rev. 04/25/23 Page 1 of 9
© 2011-2023 Acuity Brands Lighting, Inc. All rights reserved.

(P2) SERIES PEDESTRIAN LIGHT POST SPECIFICATION

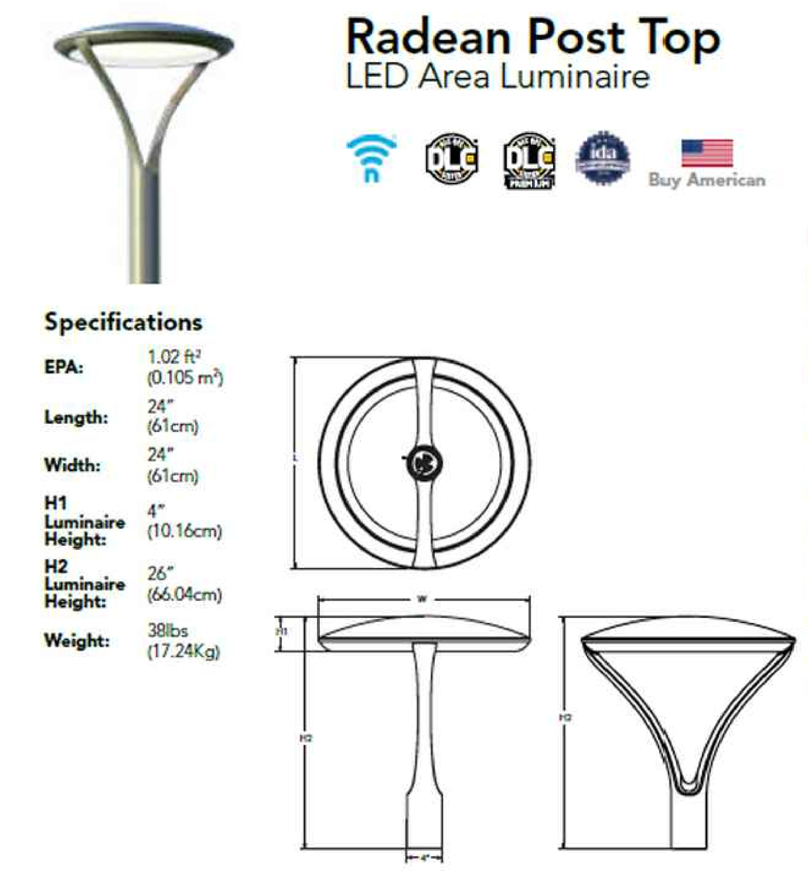

Radean Post Top
LED Area Luminaire

Buy American

Catalog Number

Notes

Type

Hit the Tab key or mouse over the page to see all interactive elements.

Introduction

The architecturally-inspired shape of the RADEAN™ post top area luminaire embodies the grace and strength of the RADEAN family. The twin copper-core cast aluminum arms support the slender superstructure, creating a beautiful sculpture by day transforming into a beacon of comfort by night. Triangular arms redirect reflection maintaining its visually quiet appearance. With sleek lines and simple silhouettes, these LED luminaires use specialized lighting and visual comfort to transform common areas like courtyards, outdoor retail locations, universities and corporate campuses into pedestrian-friendly nighttime environments.

Specifications

EPA:	1.02 ft² (0.105 m²)
Length:	24" (61cm)
Width:	24" (61cm)
H1 Luminaire Height:	4" (10.16cm)
H2 Luminaire Height:	26" (66.04cm)
Weight:	38lbs (17.24Kg)

Ordering Information — **EXAMPLE:** RADPT LED P3 30K SYM MVOLT PT4 PIR DNAXD

RADPT LED

Series	Performance package	Color temperature	Distribution	Voltage	Mounting (required)
RADPT LED	P1 3,000 Lumens P2 5,000 Lumens P3 7,000 Lumens P4 10,000 Lumens P5 15,000 Lumens	27K 2700K 30K 3000K 35K 3500K 40K 4000K 50K 5000K	SYM Symmetric type V ASY Asymmetric type IV PATH Pathway Type III	MVOLT[2] 277[2] 120[2] 347 208[2] 480 240[2]	PT4[5] Slips inside a 4" OD round metal pole RADPT20 Slips over a 2 3/8" diameter tenon RADPT25 Slips over a 2 7/8" diameter tenon

Control options	Other options	Finish (required)
Shipped installed NLTAIR2 nLight AIR 2.0 enabled[4] PIR Bi-level motion/sensor (100% to 30%)[5,6,7,8] PE Button photocell[7] FAO Field adjustable output[5,9]	SF Single Fuse[2] DF Double Fuse[2] R90 Rotated optics[10] **Shipped installed** HS Houseside shield[11]	DDBXD Dark bronze DBLXD Black DNAXD Natural aluminum DWHXD White DDBTXD Textured dark bronze DBLBXD Textured black DNATXD Textured natural aluminum DWHGXD Textured white

LITHONIA LIGHTING. COMMERCIAL OUTDOOR One Lithonia Way • Conyers, Georgia 30012 • Phone: 1-800-705-SERV (7378) • www.lithonia.com RADPT LED Rev. 04/19/22
© 2011-2022 Acuity Brands Lighting, Inc. All rights reserved.

BOLLARD LIGHT BASE INSTALLATION DETAIL
NOT TO SCALE

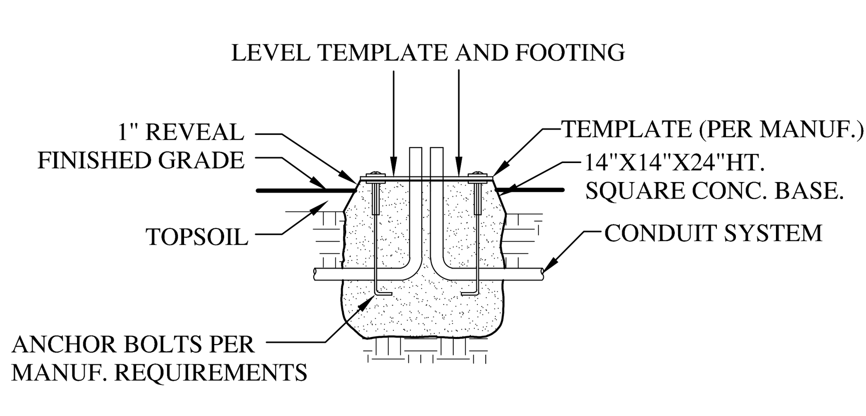

ANCHOR BOLT INSTALLATION

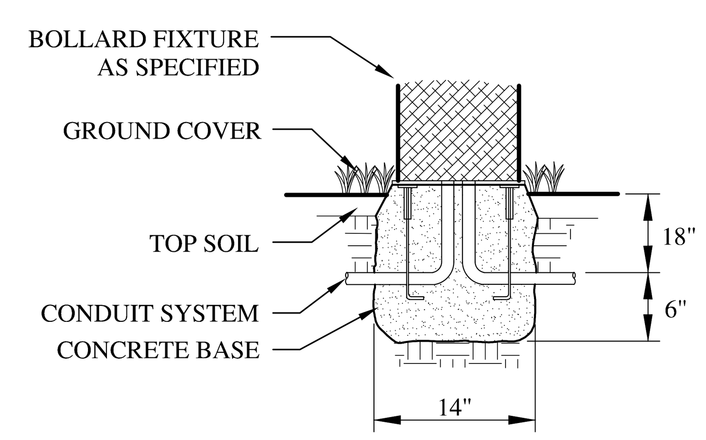

FINISHED INSTALLATION

NOTE: CONTRACTOR TO PROVIDE SHOP DRAWING OF BOLLARD, CONCRETE BASE, AND INSTALLATION METHODS TO LANDSCAPE ARCHITECT FOR APPROVAL PRIOR TO ORDERING AND INSTALLATION.

LIGHTING NOTES

LIGHT FIXTURE NOTES:

CONTRACTOR SHALL PROVIDE SHOP DRAWINGS FOR APPROVAL FOR ALL LIGHTING MATERIALS, FIXTURES, POLES AND INSTALLATION METHODS TO LANDSCAPE ARCHITECT PRIOR TO CONSTRUCTION AND INSTALLATION. CONTRACTOR SHALL COORDINATE WITH LANDSCAPE ARCHITECT ON SITE TO VERIFY AND MARK LOCATION OF ALL PROPOSED FIXTURES INCLUDING LIGHT POLES, WALL PACKS AND BOLLARDS PRIOR TO INSTALLATION.

(RB) RAISED LIGHT POLE BASE INSTALLATION DETAIL
NOT TO SCALE

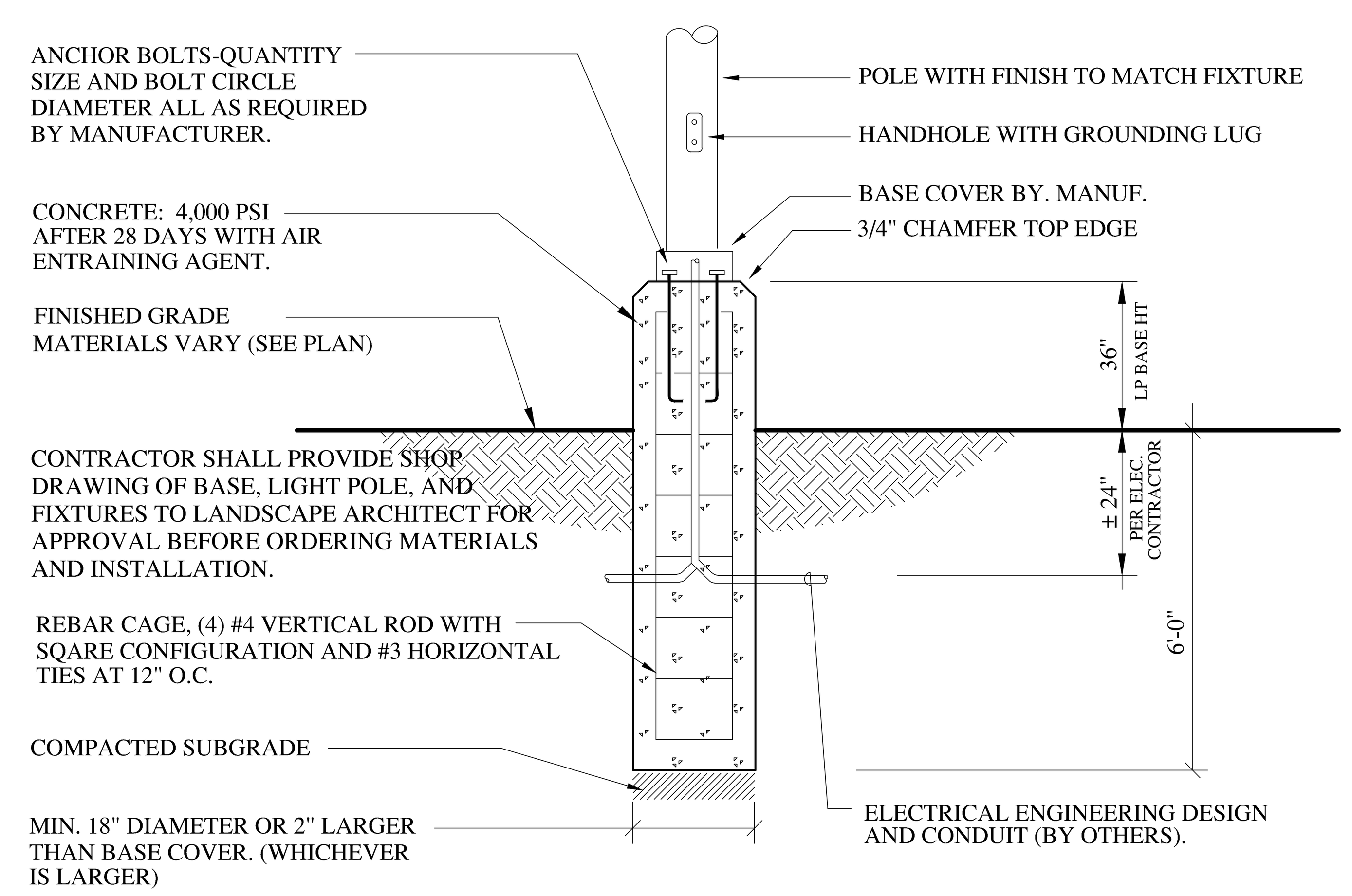

NOTES:

1. PARKING AREA LIGHT FIXTURE MOUNTING HEIGHT SHALL BE 15FT FROM GRADE (SEE PLAN)
2. PEDESTRIAN LIGHT FIXTURE MOUNTING HEIGHT SHALL BE 12FT FROM GRADE (SEE PLAN)
3. SPORT LIGHTING FIXTURE MOUNTING HEIGHT SHALL BE 18FT FROM GRADE (SEE PLAN)
4. CONTRACTOR SHALL INSTALL RAISED BASES (RB) AT 36" HIGH WHERE INDICATED ON PLANS

(GB) AT-GRADE LIGHT POLE BASE INSTALLATION
NOT TO SCALE

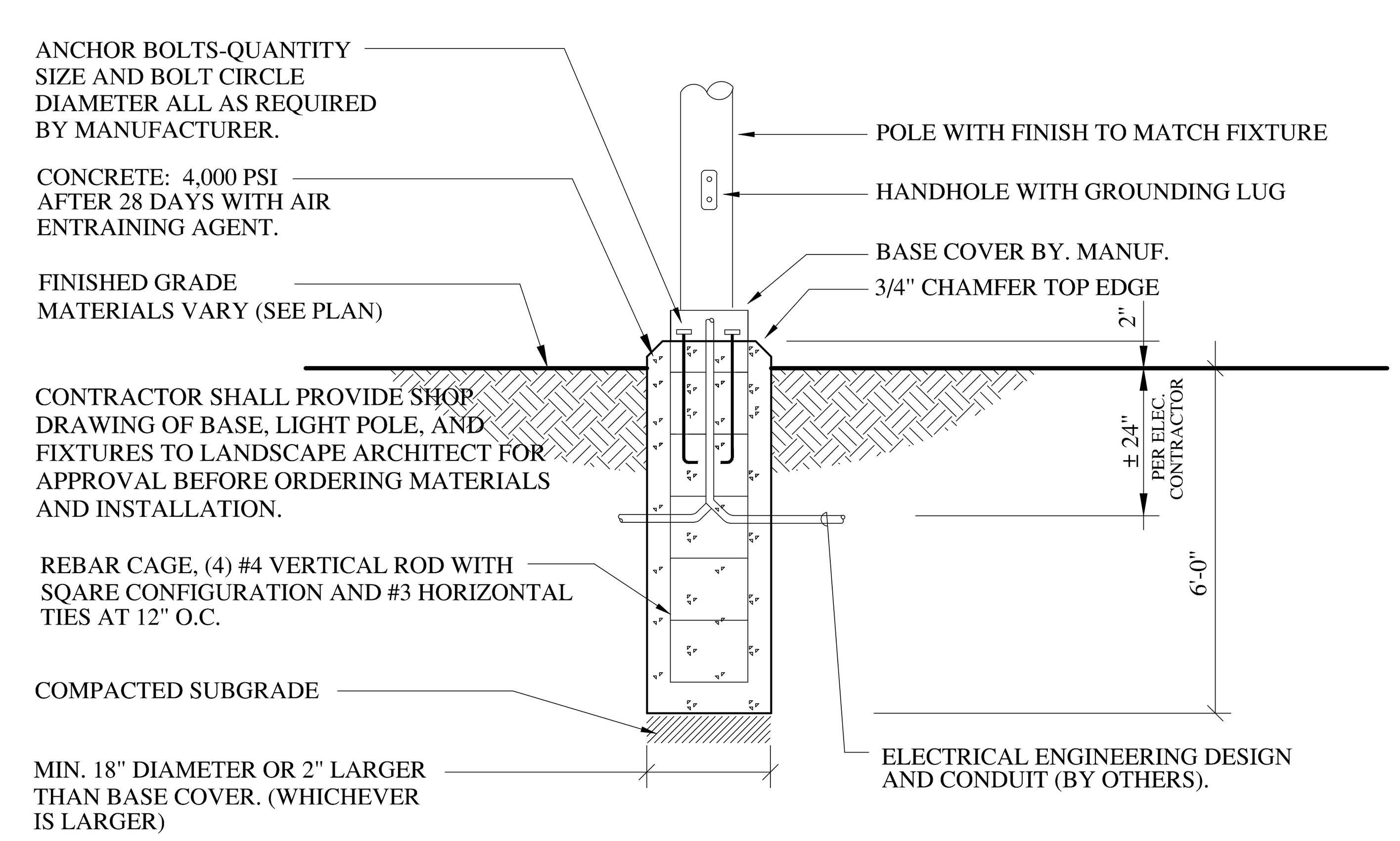

NOTES:

1. PARKING AREA LIGHT FIXTURE MOUNTING HEIGHT SHALL BE 15FT FROM GRADE (SEE PLAN)
2. PEDESTRIAN LIGHT FIXTURE MOUNTING HEIGHT SHALL BE 12FT FROM GRADE (SEE PLAN)
3. SPORT LIGHTING FIXTURE MOUNTING HEIGHT SHALL BE 15FT FROM GRADE (SEE PLAN)
4. CONTRACTOR SHALL INSTALL AT GRADE BASES (GB) AT 2" HIGH WHERE INDICATED ON PLANS

Stamp

Rev. No.	Description	Chkd.

ParkArchitecture.com
3 School House Lane, Suite #1 Etna NH 03750
Tel: 603-643-3400 Mobile: 617-905-0467
Email: parkarchitecture@gmail.com

Client: SAXON PARTNERS
25 RECREATION PARK DRIVE, SUITE 204
HINGHAM, MA 02043
781-875-3300

Sheet Title: SITE LIGHTING DETAILS (1 OF 2)

Project Title: MAREK 2
402 MT SUPPORT ROAD
CITY OF LEBANON, GRAFTON COUNTY, NEW HAMPSHIRE

PA Project #	2315
Checked By:	PS
Drawn By:	PS
Scale:	NTS
Date:	09/11/2023

L5.3

(ELT-1) BUILDING SCONCE LIGHTING (AT 7'-2" HT)

Submitted by Reflex Lighting Group, Inc.

Job Name: 35 Garvey Street
Architect: The Architectural Team (Chelsea)
Engineer: R.W. Sullivan (Boston)

Catalog Number: WP-LED127-30-XX
Notes: PLEASE ADVISE FINISH

Type: E24
BOST22-295796

FIN - model: WP-LED1
Endurance Wallpack

WAC LIGHTING
Responsible Lighting®

Fixture Type:
Catalog Number:
Project:
Location:

PRODUCT DESCRIPTION
Die cast aluminum factory sealed housings with patent pending design for a water and dust proof IP66 rated outdoor luminaire

FEATURES
- Factory-Sealed LED Light Engine
- 20° Forward Throw Illumination
- Photo/Motion Sensor Compatible (Sold Separately)
- Built-in Level For Easy Adjustment
- Suitable to install in all directions
- Multi-Function Dimming: ELV (120V) or 0-10V
- 85 CRI
- 100,000 hour rated life

SPECIFICATIONS
Construction: Die-cast aluminum
Power: Integral driver in luminaire. Universal voltage input (120V-277V)
Dimming: 100% - 30% with 0 - 10V dimmer (120V - 277V)
100% - 15% with Electronic Low Voltage (ELV) dimmer (120V only)
Finish: Powder coated Bronze, Graphite, and White
Standards: Energy Star*, DLC Listed, IP66, Wet Location, ETL & cETL Listed

PHOTOMETRY

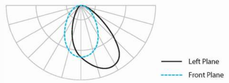

ORDER NUMBER

	Power	Comparable	Delivered Lumens 3000K	Delivered Lumens 5000K	Color Temp		Finish	
WP-LED119	19W	39W HID	1390	1460	30	3000K	BZ	Bronze
WP-LED127	27W	70W HID	2035	2135	50	5000K	GH	Graphite
WP-LED135	35W	100W HID	2750	2825			WT	White

PLEASE SELECT

_____ - ___ - ___

Example: **WP-LED119-50-BZ**

NOTES:
1. COLOR AND FINISH TO BE SELECTED BY OWNER / ARCHITECT.
2. PROVIDE SHOP DRAWING FOR APPROVAL TO ARCHITECT.

ACCESSORIES

Motion Sensor (120V): MS-120-BZ Bronze, MS-120-GY Gray, MS-120-WT White

Photo Sensor (120V): PC-120-BZ Bronze, PC-120-GY Gray, PC-120-WT White

WAC Lighting
www.waclighting.com
Phone (800) 526.2588 • Fax (800) 526.2585

Headquarters/Eastern Distribution Center
44 Harbor Park Drive • Port Washington, NY 11050
Phone (516) 515.5000 • Fax (516) 515.5050

Western Distribution Center
1750 Archibald Avenue • Ontario, CA 91760
Phone (800) 526.2588 • Fax (800) 526.2585

WAC Lighting retains the right to modify the design of our products at any time as part of the company's continuous improvement program. DEC 2014

Submitted On: Sep 7, 2022 1/1 Index Page

(X-1) CROSS WALK LIGHTING SPECIFICATION

LEOTEK LITE-ON GROUP

GreenCobra™ Jr. LED Street Light
GCJ J-Series Specification Data Sheet

Project: Solar Crosswalk Lighting
Type: LED Fixture for Solar Pole
Catalog No.: GCJ1-30J-MV-30K-4-BK-050-RPB

Luminaire Data
Weight 7.7 lbs [3.5 kg]
EPA 0.39 ft²

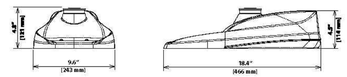

CITY ROW ANNUAL OPERATING NOTES:

MARCH - NOVEMBER: LIGHTING WILL BE ON FROM DUSK TO 9PM AT 100% OUTPUT; AND AT 30% OUTPUT FROM 9PM UNTIL 2 HOURS BEFORE DAWN; AND AT 100% OUTPUT DURING LAST 2 HOURS BEFORE SHUTTING OFF AT DAWN.

DECEMBER - FEBRUARY: LIGHTING WILL BE ON FROM DUSK TO 9PM AT 100% OUTPUT; AND AT 20% OUTPUT FROM 9PM UNTIL 2 HOURS BEFORE DAWN; AND AT 50% OUTPUT DURING LAST 2 HOURS BEFORE SHUTTING OFF AT DAWN.

Ordering Information
Sample Catalog No. GCJ1-30J-MV-40K-2R-GY-055-PCR7-WL

Model*	LED Code	Voltage	Color Temperature	Distribution	Finish[1]	Output Code[2]	Options
GCJ1* GCJ2* GCJ3* GCJ4*	30J	MV 120-277V HV 347-480V	27K 2700K 30K 3000K 40K 4000K 50K 5000K	2R Type 2 3R Type 3R 3F Type 3F 4 Type 4 5 Type 5	GY Gray DB Dark Bronze BK Black	Refer to Page 3 to select the performance code.	FOC[3] Fixed Output Code LPCR Less Photocontrol Receptacle PCR2[4] ANSI 7-wire Photocontrol Receptacle PCR7-CR[5] Control Ready 7-wire PC Receptacle M5L3 Motion Sensor, L3 Lens M5L7 Motion Sensor, L7 Lens WL Utility Wattage Label 4B 4-Bolt Mounting Bracket RWG Rubber Wildlife Guard SWTB Straight Wire Terminal Block BBL Bubble Level DSC Door Safety Cable CF[6] Coastal Paint Finish SP2[7] Extreme Surge Protection, 20kV/10KA, Fail-to-on LSSP2[7] Extreme Surge Protection, Fail-to-off, 20kV/10kA Rating

* Refer to performance data table on page 3, 4 for specific model with corresponding output code

Notes:
1 Gray, Black, and Dark Bronze standard. Consult factory for other finishes. See page 2 for RAL codes of Standard finishes.
2 Specified output code is the factory set lumen performance. Refer to performance data table on page 3, 4 of this spec sheet. Field adjustable output selector enables fixture to be changed in the field to adjust light output for local conditions (not available with Fixed Output Code, FOC) or PCR7-CR option. Consult factory if wattage limits require a special drive current.
3 Non-field adjustable, fixed output code. Specify required output code. Not available with PCR7-CR option.
4 Includes output selector that enables field adjustability of light levels. Includes connectors to allow easy upgrade of wireless dimming via PCR7. Wireless node by others.
5 Control-ready wired at factory for wireless node dimming (node by others). Output selector not included in the fixture. Not able to adjust above specified output code.
6 Specify the CF Option for coastal installation. See warranty for details.
7 Standard surge protection, 10kV/5kA, fail-to-on, meets enhanced surge protection based on ANSI 136.25-2015 3-part test.
8 Flush mounted house side shield. Shield cuts light off at 1 mounting height behind luminaire. Gray frame with black louvres.
9 Flush mounted cul-de-sac shield. Shield cuts light off at 1 mounting height behind luminaire and 2 times the mounting height on either side of luminaire. Gray frame with black louvres.
10 Flush mounted front side shield cuts light off at approximately 1X mounting height in front of luminaire (street side). Gray frame with black louvres.
11 Specify Color (GY, DB, BK). Refer to Leotek web site for specific mounting details and drawings at https://leotek.com/lighting-library/
12 Specify MV (120-277V) or HV (347-480V).

Accessories*

H5SJGCJ[8]	House Side Shield, Snap-On*
C5SJGCJ[9]	Cul-De-Sac Side Shield, Snap-On*
F5SJGCJ[10]	Front Side Shield, Snap-On*
SPB[11]	Square Pole Horizontal Arm Bracket
RPB[11]	Round Pole Horizontal Arm Bracket
PTB[11]	Pole Top Tenon Horizontal Arm Bracket
PTB2[11]	Pole Top Tenon Horizontal Arm Bracket (2@180°)
WB[11]	Wall Horizontal Arm Bracket
BSK	Bird Deterrent Spider Kit
LLPC[12]	Long-Life Twist Lock Photocontrol
SC	Twist Lock Shorting Cap

* Unless specified for field installation, Shields and Shorting Caps are shipped installed. All other options are shipped separately.

©2022 Leotek Electronics USA. GCJ_J-Series_Specification Sheet_ 12-6-2022. Specifications subject to change without notice.

POLE TOP BRACKET

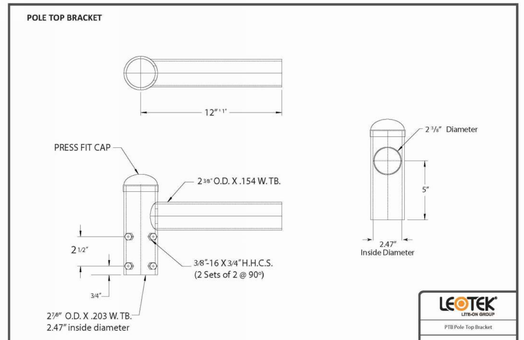

NOTES:
1. Slip fits 2⅛" tenon
2. Mounting hardware provided with bracket: 3/8"-16 X 3/4" H.H.C.S. (2 SETS OF 2 @ 90o)
3. Specify color when ordering (**GY**: Gray, **DB**: Dark Bronze, **BK**: Black).

Lorem ipsum
ANSI C136.21 Compliant

Model No	Model Name
PTB	Pole Top Bracket

LEOTEK LITE-ON GROUP
PTB Pole Top Bracket
LEOTEK ELECTRONICS USA, LLC
1955 LUNDY AVENUE
SAN JOSE, CA 95131
PHONE: (408) 380-1788
FAX: (408) 578-8128

POLE TOP BRACKET

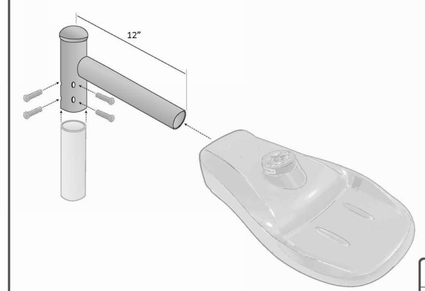

NOTES:
1. Slip fits 2⅛" tenon
2. Mounting hardware provided with bracket: 3/8"-16 X 3/4" H.H.C.S. (2 SETS OF 2 @ 90o)
3. Specify color when ordering (**GY**: Gray, **DB**: Dark Bronze, **BK**: Black).

ANSI C136.21 Compliant

Model No	Model Name
PTB	Pole Top Bracket

LEOTEK LITE-ON GROUP
PTB Pole Top Bracket
LEOTEK ELECTRONICS USA, LLC
1955 LUNDY AVENUE
SAN JOSE, CA 95131
PHONE: (408) 380-1788
FAX: (408) 578-8128

(SLP) STRING LIGHT POLE (FOR SEASONAL USE ONLY)

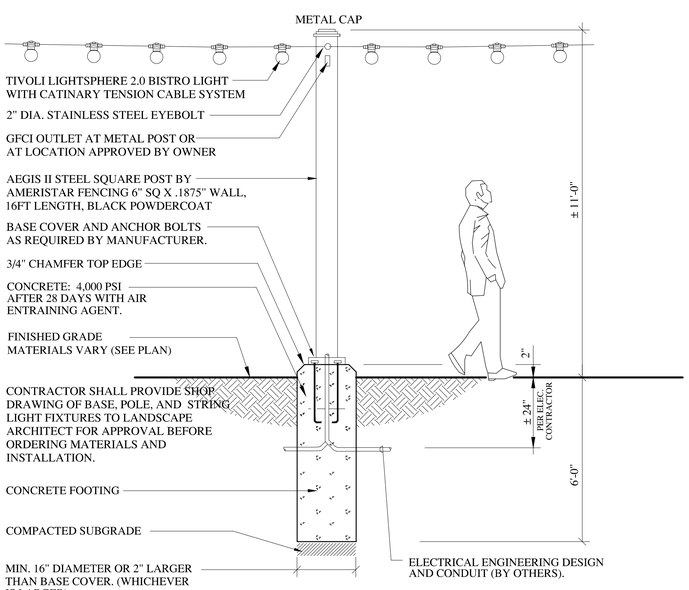

STRING LIGHTING / MAXIMUM RUN LENGTH STANDARDS

LED TYPE	6" ON CENTER	12" ON CENTER	18" ON CENTER	24" ON CENTER
STANDARD	130 FT	180 FT	230 FT	250 FT
HIGH OUTPUT	80 FT	110 FT	130 FT	150 FT
VERY HIGH OUTPUT	30 FT	55 FT	70 FT	80 FT

Product Features

- Tivoli's next evolution of Litesphere delivers a robust specification-grade strand with factory molded standard spacing for consistent quality from start to finish
- Litesphere 2.0 design provides optional suspended mounting or a twist-off cap for surface applications
- 12V DC Low voltage system for long runs
- IP67
- cULus
- 3 Year warranty

Dimensions

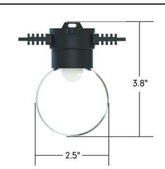

NOTES:
1. MAXIMUM RUN: 250FT
2. PROVIDE 3 RUNS AS FOLLOWS:
   RUN 1: ± 50 FT (SEE PLAN)
   RUN 2: ± 50 FT (SEE PLAN)
   RUN 3: ± 50 FT (SEE PLAN)
3. LUMENS: 2,700
4. COLOR: BLACK
5. BULB SPCING: 24 INCHES
6. CONTRACTOR SHALL PROVIDE SHOP DRAWINGS FOR APPROVAL PRIOR TO ORDERING AND INSTALLATION INCLUDING STRING LIGHT POSTS AND LIGHTING FIXTURES.

12V | Litesphere™ 2.0 — tivoli

System Configuration Example

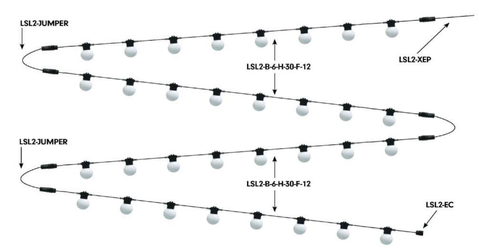

Strand Order Guide
Note: For suspension application, a catenary cable is required for proper installation. Please contact Tivoli for recommendations on unique mounting applications.

Product	Wire	Spacing	LED Type	LED Color	Globe	Voltage
LSL2 - Litesphere 2.0	B Black W White	06 6" OC 12 12" OC 18 18" OC 24 24" OC 36 36" OC 48 48" OC	V Very High Output H High Output S Standard Output	19 1900K 27 2700K 30 3000K 35 3500K 40 4000K 50 5000K* AM Amber* RB Royal Blue* RD Red* GN Green* YL Yellow*	C Clear F Frosted O Opal	12 12V DC

*Available in VHO LED only

Stamp

Rev. No.	Description	Chkd.

ParkArchitecture.com
3 School House Lane, Suite #1 Elma NH 03750
Tel: 603-443-3400 Mobile: 617-905-0467
Email: parkarchitecture@gmail.com

Client:
SAXON PARTNERS
25 RECREATION PARK DRIVE, SUITE 204
HINGHAM, MA 02043
781-875-3300

Sheet Title: SITE LIGHTING DETAILS (2 OF 2)

Project Title: MAREK 2
402 MT SUPPORT ROAD
CITY OF LEBANON, GRAFTON COUNTY, NEW HAMPSHIRE

PA Project #	2315
Checked By:	PS
Drawn By:	PS
Scale:	NTS
Date:	09/11/2023

L5.4

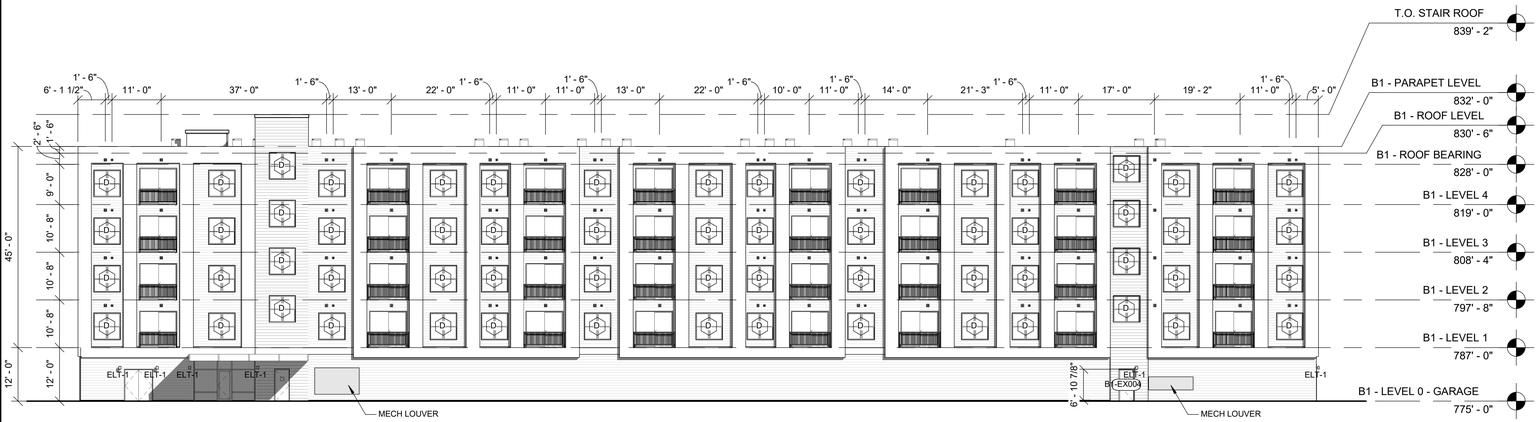

40 BUILDING B1 - NORTH ELEVATION
Scale: 1/16" = 1'-0"

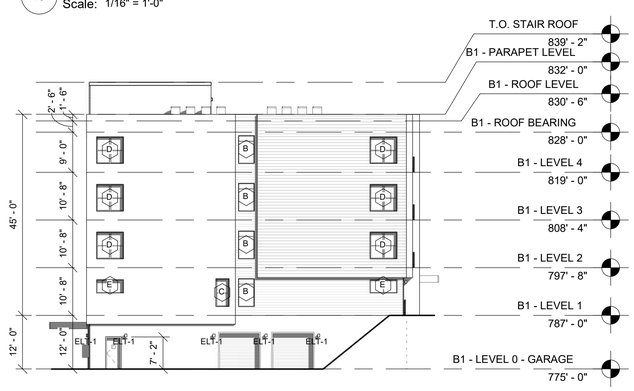

20 BUILDING B1 - WEST ELEVATION
Scale: 1/16" = 1'-0"

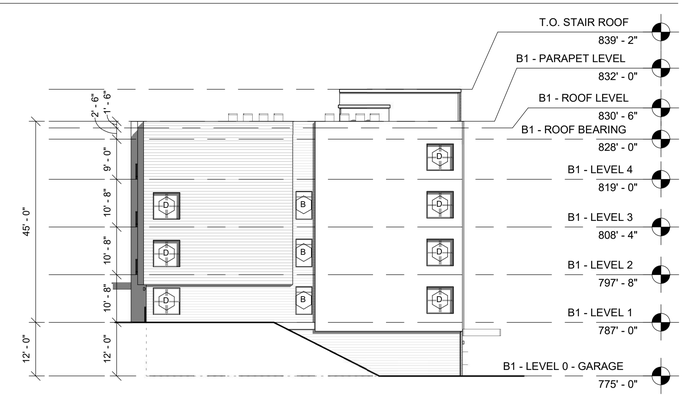

30 BUILDING B1 - EAST ELEVATION
Scale: 1/16" = 1'-0"

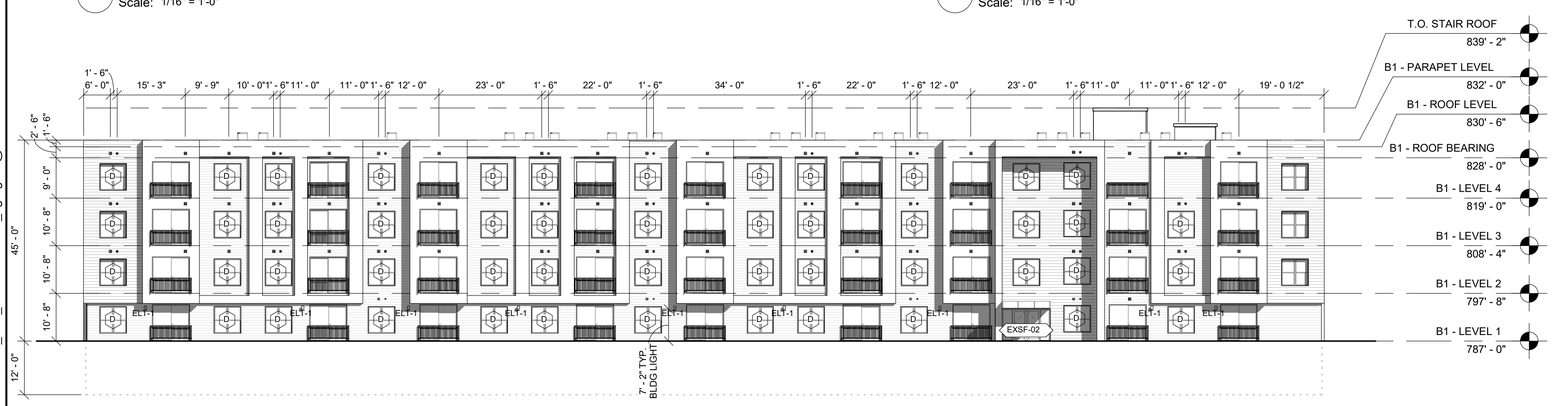

10 BUILDING B1 - SOUTH ELEVATION
Scale: 1/16" = 1'-0"

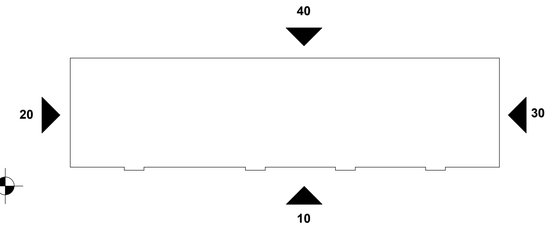

BUILDING B1 - KEY PLAN

EXTERIOR MATERIAL LEGEND

- **ARCHITECTURAL PANEL** NICHIHA
- **ARCHITECTURAL PANEL** OKO
- **HARDIE LAP SIDING** COLOR: GRAY SLATE - 7" ETW
- **HARDIE LAP SIDING** COLOR: IRON GRAY - 7" ETW
- **HARDIE PANEL** COLOR: ARTIC WHITE
- **HARDIE PANEL** COLOR: COUNTRYLANE RED
- **PRECAST VENEER** GRANITE
- **PRECAST VENEER** STONE

tat

© The Architectural Team, Inc.
50 Commandant's Way at Admiral's Hill
Chelsea MA 02150
O 617.889.4402
F 617.884.4329
architecturalteam.com

Consultant:

Revision:

Architect of Record:

Drawn: RP

Checked: JS

Scale: 1/16" = 1'-0"

Key Plan:

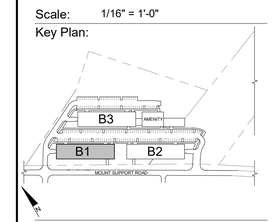

Project Name:

MAREK LEBANON

402 MT SUPPORT ROAD,
LEBANON, NH

Sheet Name:

BUILDING B1 - EXTERIOR ELEVATIONS

Project Number:

22114

Issue Date:

09/11/2023

Sheet Number:

B1-A4.01

9/7/2023 10:13:28 AM
C:_Revit Local 2023\22114_R23_Marek Lebanon_ngregsak@architecturalteam.com.rvt

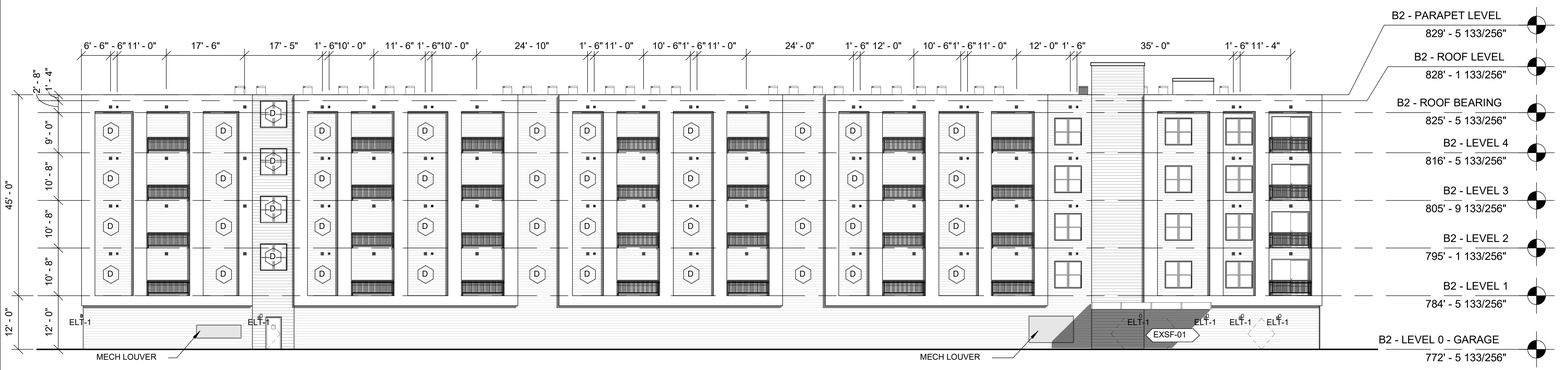

40 BUILDING B2 - NORTH ELEVATION
Scale: 1/16" = 1'-0"

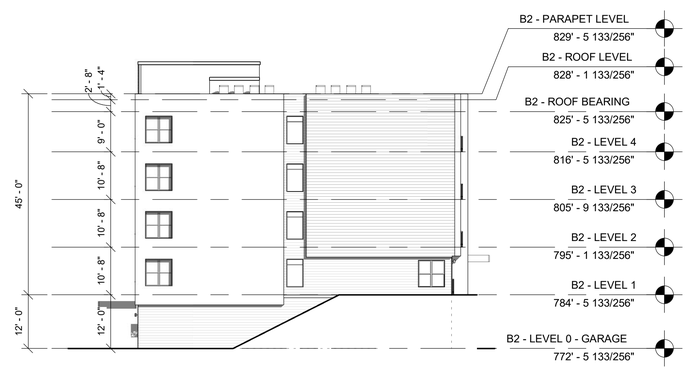

20 BUILDING B2 - WEST ELEVATION
Scale: 1/16" = 1'-0"

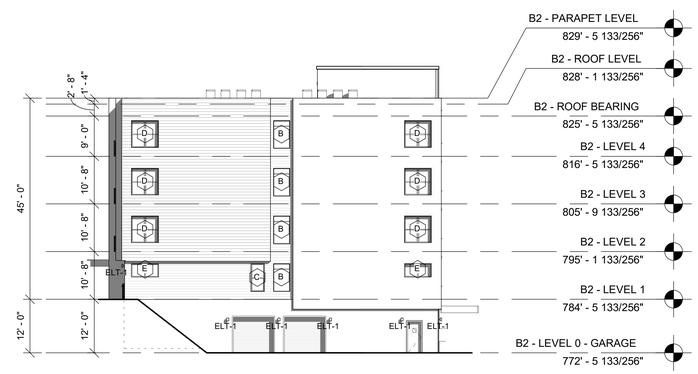

30 BUILDING B2 - EAST ELEVATION
Scale: 1/16" = 1'-0"

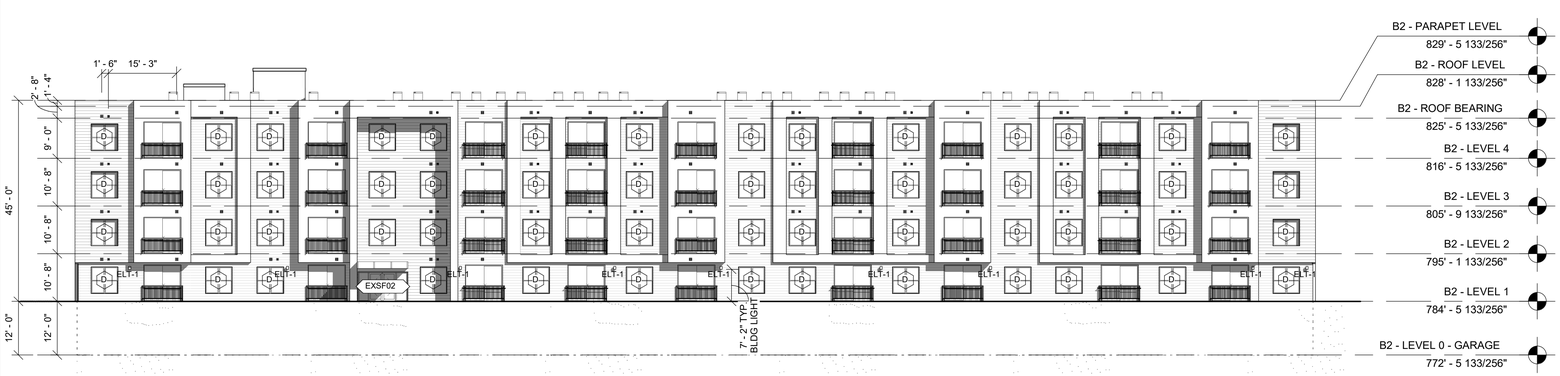

10 BUILDING B2 - SOUTH ELEVATION
Scale: 1/16" = 1'-0"

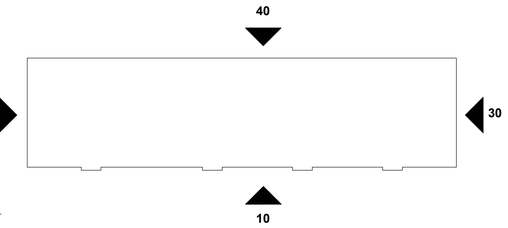

BUILDING B2 - KEY PLAN

EXTERIOR MATERIAL LEGEND

- **ARCHITECTURAL PANEL** NICHIHA
- **ARCHITECTURAL PANEL** OKO
- **HARDIE LAP SIDING** COLOR: GRAY SLATE - 7" ETW
- **HARDIE LAP SIDING** COLOR: IRON GRAY - 7" ETW
- **HARDIE PANEL** COLOR: ARTIC WHITE
- **HARDIE PANEL** COLOR: COUNTRYLANE RED
- **PRECAST VENEER** GRANITE
- **PRECAST VENEER** STONE

tat

© The Architectural Team, Inc.
50 Commandant's Way at Admiral's Hill
Chelsea MA 02150
O 617.889.4402
F 617.884.4329
architecturalteam.com

Consultant:

Revision:

Architect of Record:

Drawn: RP

Checked: JS

Scale: 1/16" = 1'-0"

Key Plan:

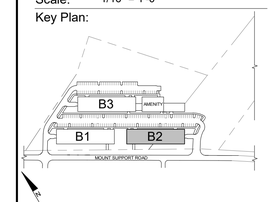

Project Name:

MAREK LEBANON

402 MT SUPPORT ROAD,
LEBANON, NH

Sheet Name:

BUILDING B2 - EXTERIOR ELEVATIONS

Project Number:

22114

Issue Date:

09/11/2023

Sheet Number:

B2-A4.01

9/7/2023 10:13:53 AM
C:_Revit Local 2023\22114_R23_Marek Lebanon_ngregsak@architecturalteam.com.rvt

EXTERIOR MATERIAL LEGEND

- **ARCHITECTURAL PANEL** NICHIHA
- **ARCHITECTURAL PANEL** OKO
- **HARDIE LAP SIDING** COLOR: GRAY SLATE - 7" ETW
- **HARDIE LAP SIDING** COLOR: IRON GRAY - 7" ETW
- **HARDIE PANEL** COLOR: ARTIC WHITE
- **HARDIE PANEL** COLOR: COUNTRYLANE RED
- **PRECAST VENEER** GRANITE
- **PRECAST VENEER** STONE

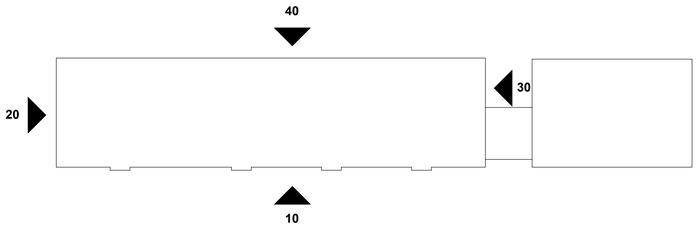

BUILDING B3 - KEY PLAN

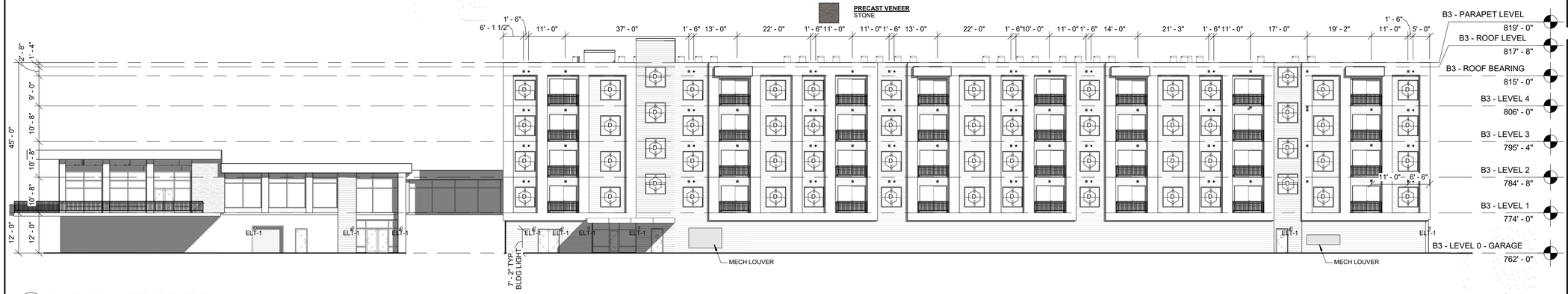

40 BUILDING B3 - NORTH ELEVATION
Scale: 1/16" = 1'-0"

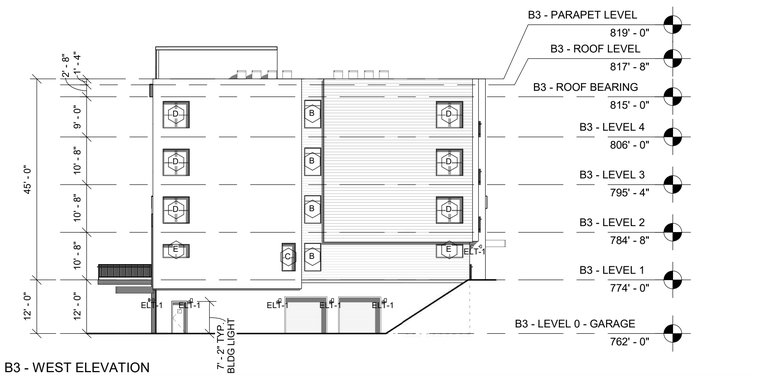

20 BUILDING B3 - WEST ELEVATION
Scale: 1/16" = 1'-0"

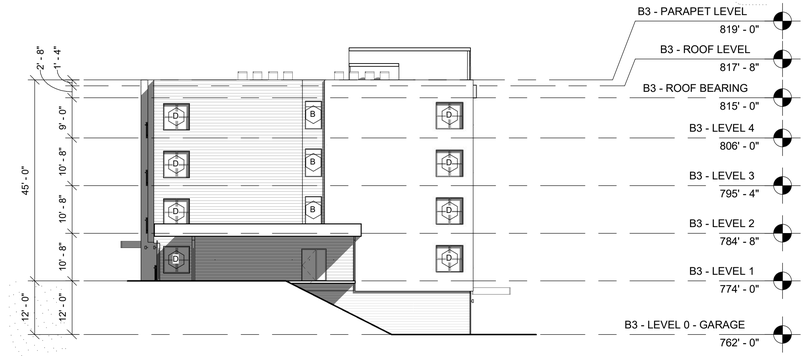

30 BUILDING B3 - EAST ELEVATION
Scale: 1/16" = 1'-0"

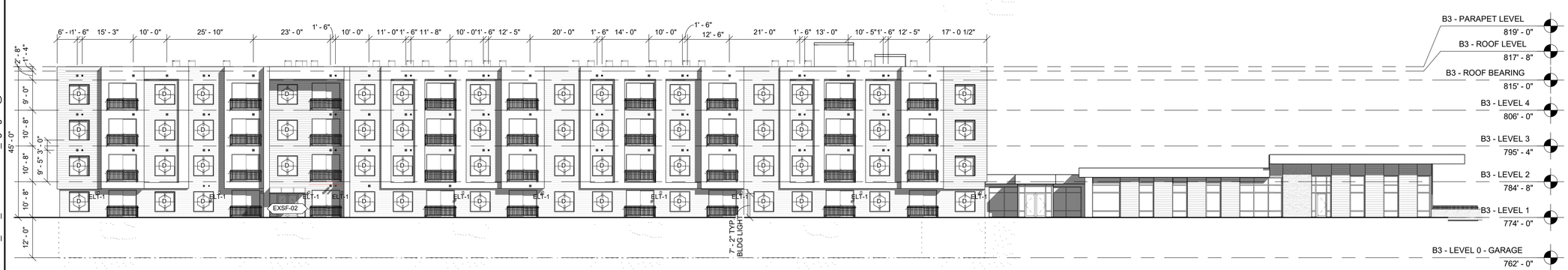

10 BUILDING B3 - SOUTH ELEVATION
Scale: 1/16" = 1'-0"

tat

© The Architectural Team, Inc.
50 Commandant's Way at Admiral's Hill
Chelsea MA 02150
O 617.889.4402
F 617.884.4329
architecturalteam.com

Consultant:

Revision:

Architect of Record:

Drawn: RP

Checked: JS

Scale: 1/16" = 1'-0"

Key Plan:

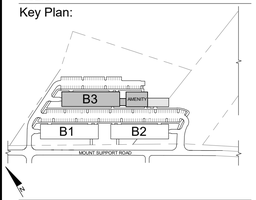

Project Name:

MAREK LEBANON

402 MT SUPPORT ROAD, LEBANON, NH

Sheet Name:

BUILDING B3 - EXTERIOR ELEVATIONS

Project Number:

22114

Issue Date:

09/11/2023

Sheet Number:

B3-A4.01

9/7/2023 10:14:25 AM
C:_Revit Local 2023\22114_R23_Marek Lebanon_ngregsak@architecturalteam.com.rvt

DRAFT

LEBANON PLANNING BOARD
Regular Session
Monday, September 11, 2023, 6:30 PM
Council Chambers, City Hall
or Remote Via Microsoft Teams
LebanonNH.gov/Live

MEMBERS PRESENT: Matthew Hall (Chair), Jeremy Rutter (Vice Chair), Karen Zook (City Council Rep), Andrew Faunce, Bruce Garland, Patrick Kennelly, Kathie Romano

MEMBERS ABSENT: Kim Chewning, Laurel Stavis

STAFF PRESENT: Nathan Reichert (Planning Director), Tim Corwin (Deputy Planning Director), Brian Vincent (City Engineer)

---

1. Call to Order

Chair Hall called the meeting to order at 6:30 PM.

2. Notice of Regional Impact

The following applications were received by the Planning and Development Department on or before September 11, 2023:

Vincent & Tarah Cantore, 121 Slayton Hill Road (Tax Map 134, Lot 10), zoned RL-2: Request for approval of a proposed three (3)-lot Minor Subdivision. **PB2023-13-MIN**

SPNH Lebanon North, LLC, 402 & 392 Mount Support Road (Tax Map 24, Lots 9 & 10), zoned R-1: Pursuant to Section 9.1 of the Site Plan Review Regulations, a request for a modification to a previously approved Site Plan (PB2021-33-SPR) for a 204-unit multi-family development. Applicant proposes to construct 3, 4-story multi-family dwellings and a community amenity building in place of the 4, 3-story multi-family dwellings currently approved, together with related modifications to parking, utilities, landscaping, access, and other site improvements. **PB2023-34-SPR**

Mr. Corwin stated that the above applications have no potential for regional impact.

A MOTION by Bruce Garland that the submitted applications have no potential for regional impact. The motion was seconded by Jeremy Rutter.
****The MOTION was approved (7-0).***

3. Public Hearing Items

A. MG Holdings, LLC, 200 Hanover Street Ext (Tax Map 48, Lot 7), zoned R-3: Request for a Minor Subdivision of the subject property into three (3) lots. **PB2023-29-MIN**

Mr. Corwin stated that the application is complete enough for the Planning Board to accept jurisdiction and commence review.

A MOTION by Jeremy Rutter that the application of **MG Holdings, LLC, 200 Hanover Street Ext (Tax Map 48, Lot 7), zoned R-3, is complete enough for the Planning Board to accept jurisdiction and commence review.**

The motion was seconded by Bruce Garland.
****The MOTION was approved (7-0).***

Surveyor Wayne McCutcheon representing the application. Property owner Mike Gallo of Gallo Realty appeared online.

Mr. McCutcheon provided a description of the proposed subdivision.

Mr. Corwin stated that it is a straightforward application and noted the conditions of approval. There is a minor issue of a shed that needs to be relocated or removed.

Chair Hall invited public comment.

David Kroger, 194 Hanover Street, who is next door to the location, spoke regarding the applicaiton. Mr. Kroger inquired about the drainage and sewage for the project. Mr. McCutcheon stated that they are aware of the features of the property and addressed the concerns. Chair Hall noted that those issues are not related to the subdivision decision. Mr. McCutcheon noted the location of a proposed building and the plans for avoiding the wetlands.

Chair Hall closed the Public Hearing.

A MOTION by Jeremy Rutter that the Lebanon Planning Board **APPROVE** the application of **NBKS, LLC, for a proposed three (3)-lot Minor Subdivision of 200 Hanover Street (Tax Map 48, Lot 7), PB2023-29-MIN**, as shown on a plat titled "Minor Subdivision Plan of Land Owned by MG Holdings, LLC," prepared by Wayne McCutcheon Associates, Inc., dated July 5, 2023, project no: 1673223, including any and all supplemental submissions and testimony provided during the public hearing.

In support of its decision, the Board finds that the applicant has submitted plans, testimony, and technical data prepared by a licensed land surveyor that together satisfactorily demonstrate compliance with the applicable requirements of the Subdivision Regulations except as may reasonably be addressed through the imposition of certain conditions of approval, set forth below.

This approval is subject to the following conditions:

<u>Conditions to be Satisfied Prior to the Signing and Recording of the Plat</u>

1. The applicant shall provide a revised plat depicting the following changes to the satisfaction of the Planning and Development Department:
    a. Contact the Assessing Department to obtain the tax map/lot numbers for the new lots and add to the plat.
    b. Contact the Police Department to obtain the street addresses for each new lot and add to the plat.
    c. Add a note indicating that the plat was approved pursuant to the City of Lebanon Subdivision Regulations last revised June 28, 2021.
    d. Add Planning Board number (PB2023-29-MIN).
    e. Identify acreage and square footage of existing lot.

f. Depict the names and mailing addresses of the holders of any easements or other restrictions. (Section 9.5.A.2)
g. Identify date of the completion of the field survey. (9.5.A.5)
h. Add statement required by Section 7.11 of the Subdivision Regulations.
i. Provide the date and description of the plat revisions. (9.5.A.1)

2. The applicant shall provide a digital record drawing (Cad .dwg format using NH State Plane Coordinate system or an alternative approved by the City's GIS Coordinator).

3. Remove the existing shed from Lot 1 and obtain a demolition permit from the Planning and Development Department, if required. If relocating the shed to Lot 2, obtain a Building Permit.

General Conditions

4. Future development on the new lots shall be subject to City of Lebanon Impact Fees, pursuant to Section 213 of the Zoning Ordinance. The Impact Fee shall be calculated at the time of Building Permit issuance based on the Impact Fee Schedule adopted on October 12, 2021, and such fees shall be due and payable at the time of issuance of a Certificate of Occupancy. In accordance with RSA 674:39, the approved site plan shall be exempt from any future changes in impact fees and methodology for five years from the date of approval; however, any building permits which are issued after the end of that five-year period shall be fully subject to whatever impact fees and methodology are in effect at the time of building permit issuance.

5. All future construction shall substantially conform with and shall be subject to the requirements and specifications of the recorded plat (Section 7.9.A.2), except that the proposed curb cut for Lot 3 and the gravel drives for Lots 1 and 2 may be relocated if approved by the Department of Public Works in connection with an application for a Driveway Permit.

The motion was seconded by Patrick Kennelly.
****The motion was approved (7-0).***

A MOTION by Jeremy Rutter that the Lebanon Planning Board authorizes the Chair to sign the Minor Subdivision plat of MG Holdings, LLC, PB2023-29-MIN, titled "Minor Subdivision Plan of Land Owned by MG Holdings, LLC," prepared by Wayne McCutcheon Associates, Inc., dated July 5, 2023, as revised per the Planning Board's conditions of approval.

The motion was seconded by Bruce Garland.
****The MOTION was approved (7-0).***

B. XYZ Dairy, LLC, River Park Drive (Tax Map 44, Lots 3 & 7, and Tax Map 44, Lots 21-30), zoned CBD, IND-L and R-3: Request to amend the conditions of approval for the River Park development, approved by the Planning Board pursuant to Notices of Action dated September 9, 2019 for PB2018-34-and October 12, 2012 for PB2021-29-EXT. **PB2023-22-SPA - Continued from August 14, 2023**

Kathie Romano recused herself from this application.

Chet Clem and David Clem of Lyme Properties appeared in support of the application.

Chet Clem stated that they submitted information to the Planning Department in response to a Staff Memo of September 8, 2023, and David Clem distributed information to the Board members. Mr. Chet Clem alleged that many statements in the memo are false and noted the setbacks they have faced over many years.

Chair Hall expressed his views on the issues presented by Mr. Clem and particularly that of vesting.

Mr. David Clem stated that the concerns raised by Staff are not well founded. Mr. Clem addressed the elements related to vesting.

Mr. Garland inquired about several items related to the project and the conditions of approval. Mr. David Clem clarified the previous parking requirements and how they were met. Mr. Chet Clem noted that the 2019 phasing plan outlined the provisions for parking. Mr. David Clem stated that the lending of funds is dependent upon the completion of infrastructure, which is outlined in the 2019 phasing.

Mr. Corwin provided an explanation of Staff's understanding of the phasing and security requirements. Mr. Chet Clem expressed concern over changes in future phase decisions.

Mr. Garland noted that there are three sections for the development and asked for confirmation that lots could be transferred once the infrastructure or security is provided for the related phase. Mr. Chet Clem explained the security required for each phase.

Mr. Garland inquired about the Notice of Restriction. Mr. Corwin explained Sections 7.11 and 7.12 require security before construction. Municipalities require that a developer puts up an amount equal to the costs of construction, and it is a standard policy.

Chair Hall invited public comment.

Henry Bromberg, Ward 1, spoke in support of the project and the generosity of XYZ Dairy. He stated that an apology is due to the developer by City Staff and asked that common sense should prevail.

Kathie Romano, Ward 1, stated that there are several important points, but the assurance that infrastructure is secured would be necessary to attract investors. Ms. Romano inquired about who sets the figure for security. Mr. Corwin stated that the City Engineer determines the amount of security based up on estimates provided by the developer.

Chair Hall invited other Board members to ask questions.

Mr. Garland inquired about a way of breaking down the security by phases. Mr. David Clem provided an explanation for the request for securing individual portions of the project. Mr. Clem also explained the reasons for requesting vesting at this time.

Chair Hall closed the Public Hearing.

Mr. Garland stated that he is in favor of rescinding the Notice of Restriction and supporting the efforts to date.
Mr. Rutter expressed his agreement with Mr. Garland and the impression of the abundance of testimony that supports the uniqueness of the project and the need for trust and would support both requests.

Chair Hall stated that he would want the project to succeed, but he cannot support the request, which must be based upon the City regulations.
Mr. Kennelly stated that the requirements for vesting need to be followed, and he agreed with Mr. Hall.
Mr. Faunce expressed his view that there is a need to expedite the development and to find a way to accommodate this commercial project.
Ms. Zook expressed frustration with the situation and the potential for further issues.

Chair Hall stated that it appears the majority of the Board members are opposed to approval.

A MOTION by Jeremy Rutter to continue the hearing to October 9, 2023, at 6:30 PM.
The motion was seconded by Patrick Kennelly.
****The MOTION was approved (6-0).***

C. **XYZ Dairy, LLC, River Park Drive (Tax Map 44, Lots 3 & 7, and Tax Map 44, Lots 21-30), zoned CBD, IND-L and R-3**: Appeal of administrative decision to require Minor Site Plan Review per Section 3.1.C of the Site Plan Review Regulations for a proposed restaurant use. **PB2023-23-AAD - Continued from August 14, 2023**

Kathie Romano recused herself for this hearing.

Mr. Chet Clem asked for clarification as to what work was done that was without approval. Mr. Corwin noted several items that were constructed without approval. Mr. Clem stated that the items in the picture were temporary and not a site plan violation. The food truck, a temporary diner, and a Hootenanny event did not require Minor Site Plan review. Mr. Corwin noted that they used City sewer and water.

Mr. Clem stated their prior approvals allowed for the uses under the site plan approvals under Phase 1B regarding the sewer and water connections they had already installed.

Mr. Corwin stated that they offered minor site plan review to approve the work that was already done to bring it into compliance. The Planning Board can decide that there was no violation and no need for Minor Site Plan review. The property must be used in the way the original approval permitted. It is a new commercial use that does require review. Mr. Clem stated that they did not believe the review would happen in time for the event to happen. Mr. Corwin noted that the a Minor Site Plan review would have allowed the event to happen as scheduled.

Mr. Faunce noted that the timeline was the issue.

Mr. David Clem stated that they will remove the items from the property by the end of the month and formally withdrew the appeal.

The Board members will review the Minor Site Plan requirements.

Kathie Romano returned to the meeting

D. **Quail I, LP, 69 Lily Lane (Tax Map 8, Lot 2, Plot 200), zoned R-3:** Request for Site Plan Review to renew a previously approved Site Plan Approval (PB2019-13-SPR) to construct a new 32-unit, 50,000 square foot building for senior housing, together with associated site improvements, to be operated as part of the existing Quail Hollow Senior Living Community. **PB2023-30-SPR - Application to be postponed to September 25, 2023**

A MOTION by Bruce Garland to postpone the hearing until September 25, 2023, at 6:30PM.
The motion was seconded by Kathie Romano.
****The MOTION was approved (7-0).***

4. Other Business

Mr. Rutter inquired about the items that were to be on the August 28th agenda. Mr. Corwin stated that they will be scheduled for the September work session.

Chair Hall stated that he has been reviewing literature regarding impact fees as a barrier to housing and added that he believes there needs to be a conversation regarding the increase in impact fees voted several years ago. Ms. Romano noted that the Board members need to be educated on the issue of impact fees. Chair Hall suggested the October work session for a discussion of the issue.

A MOTION by Kathie Romano to extend the meeting to 9:45PM.
The motion was seconded by Jeremy Rutter.
****The MOTION was approved (6-1). Bruce Garland voted against.***

Mr. Reichert stated that it would be a good time to discuss this with the help of a consultant. There are also other issues that are changing for the Zoning Board that need to be considered by the Planning Board. The Associate Planner position is still open, and applications are being sought.

5. Approval of Minutes

A. July 24, 2023, and August 14, 2023

A MOTION by Karen Zook to approve the Planning Board Minutes of July 24, 2023 and August 14, 2023, as presented.
The motion was seconded by Andrew Faunce.
****The MOTION was approved (7-0).***

6. Adjournment

A MOTION by Bruce Garland to adjourn the meeting.
The motion was seconded by Andrew Faunce.
****The MOTION was approved (7-0).***

The meeting was adjourned at 9:34 PM.

Respectfully submitted,

Holly Howes
Recording Secretary